September 2019 – Volume 20 Issue 1

RIDBA JOURNAL

The Premier Rural and Industrial Building Magazine

A Word from the Editor

It gives me great pleasure to bring you the September edition of the RIDBA Journal, in what is very much a Member Special! We've had so many great stories and articles from our members, which is fantastic to see and fascinating to read. Check out our dedicated Member News feature from pages 12 to 22. I couldn't think of a more fitting way to finish the RIDBA year (which runs from October to September). This is also my first official 'return to work' Journal after being on maternity leave for the last 9 months, so it is extra special to deliver this bumper edition, which is packed with excellent news and updates.

October starts off with the RIDBA Members' Meeting offering a day of incredibly useful information, looking at CE marking in the morning session and health and safety in the afternoon. Speakers include Dorset Trading Standards, who work in partnership with RIDBA for dealing with reports of non-compliance, and the HSE inspector leading on the recent changes to the enforcement expectations for mild steel welding. It really will be an event not to be missed. Just email **admin@ridba.org.uk** if you haven't yet booked your free place.

Continuing on the health and safety theme, it is the time of year when the Health & Safety Executive (HSE) releases its annual figures for work-related injuries and how they are spread across the different industrial sectors. It may come as no surprise that construction and agriculture remain at the top of the list, recording the highest across the sectors, with falls from height being listed as the most common cause. The full article from HSE is on page 10. Working to reduce these figures remains a priority for RIDBA and we will continue working with our stakeholders to raise awareness and offer guidance where it is needed.

Other important industry issues, being dealt with by Build UK over the last number of months, including an update on the benchmarking of its Contractor members using the data submitted under the Duty to Report on Payment Practices and Performance, and what the Reverse Charge VAT means for you, can be found on page 26.

Also included in this edition, you will find an article about what it means to be a member of a trade association and why it is so important. As always, we have articles from Dr Martin Heywood on metal clad buildings on page 24 and Jamie Robertson on the importance of planning for a livestock building, which can be found on page 6.

We always welcome feedback, so please let us know if you have any comments or suggestions on how we can continue to improve RIDBA. You, the members, make RIDBA what it is, and collectively we can all work together to shape the future of the rural and industrial buildings industry.

Finally, we are keen to receive good news stories from members, so please keep in touch; either call on **0844 249 0043** or email **Debbie.Iley@ridba.org.uk.**

Debbie Iley,
Trade Association Director

RIDBA
Rural & Industrial Design & Building Association

Published By:

Rural and Industrial Design and Building Association (RIDBA)
6-8 Bonhill Street, London, EC2A 4BX
Tel: 0844 249 0043
Email: admin@ridba.org.uk
www.ridba.org.uk

Contact:
Debbie Iley, Secretariat
Email: Debbie.Iley@ridba.org.uk

Martin Heywood, Technical Consultant
Email: technical@ridba.org.uk

Jamie Robertson, Livestock Consultant
Email: jamie@ridba.org.uk

Advertising
If you would like to advertise in the RIDBA Journal:
Email: marketing@ridba.org.uk
Website: www.ridba.org.uk

Subscriptions:
Free for members of RIDBA
Non-members UK:
£20 per year, 4 issues
Non-members Overseas:
£25 per year, 4 issues.

Follow RIDBA on Twitter:
@RIDBA_Office

RIDBA is a member of Build UK.
ISSN: 1473 – 835X

RIDBA Members' Meeting – Not To Be Missed!

The next RIDBA Members' Meeting will take place on 16 October in Sutton Coldfield, near Birmingham, and will provide the latest updates on CE Marking and the top health and safety issues for the rural and industrial buildings industry.

With the launch of RIDBA's CE Marking campaign to crack down on non-conforming steel frame manufacturers, members will hear from Trading Standards on the latest enforcement activity across the UK. There will also be an update on the impact of Brexit on CE Marking, notified bodies and the new UKCA (UK Conformity Assessed) Mark from notified body BM Trada and RIDBA's Technical Consultant, Martin Heywood. We will also look at some of the technological and software solutions to help RIDBA members manage their design process within the conformity to CE Marking.

The afternoon will shift focus to health and safety, with the HSE providing an overview of the changes and the inspection regime for mild weld fume, and practicable guidance from the Institute of Local Exhaust Ventilation Engineers (ILEVE), for RIDBA members to implement into their businesses. Also covered will be the management of silica dust when cutting roof panels from tooling company Makita.

The event is free to attend, but booking is essential via **trainingandevents@ridba.org.uk**.

To see the latest speaker announcements and the full agenda for the day, please visit **ridba.org.uk/members-meeting**.

Dates for your Diary

8-10 October UK Construction Week, NEC Birmingham

10 October BIAC National Rural Planning Conference, Madejski Stadium, Berkshire

16 October RIDBA Members' Meeting, Moor Hall Hotel, Sutton Coldfield

19-20 October Countryside Live, Great Yorkshire Showground, Harrogate

6-7 November Farm Business Innovation Show, NEC, Birmingham

14 November East of England Farming Conference, East of England Showground, Peterborough

20-21 November Offsite Construction Show, ExCel London

27-28 November London Build, Olympia, London

The Farm Buildings Handbook – OUT NOW!

It has been a long wait, but we are delighted to announce that the third edition of the Farm Buildings Handbook is now available. It has been six years since the previous edition was published and there have been significant changes in the industry, including CE marking and the Construction (Design and Management) Regulations (CDM) to name just two.

The Handbook has been supported by a number of members through advertising, including Steadmans, who sponsored the publication.

The publication is available now from RIDBA for £14.99 plus postage. To order your copy email **admin@ridba.org.uk** or visit **ridba.org.uk**.

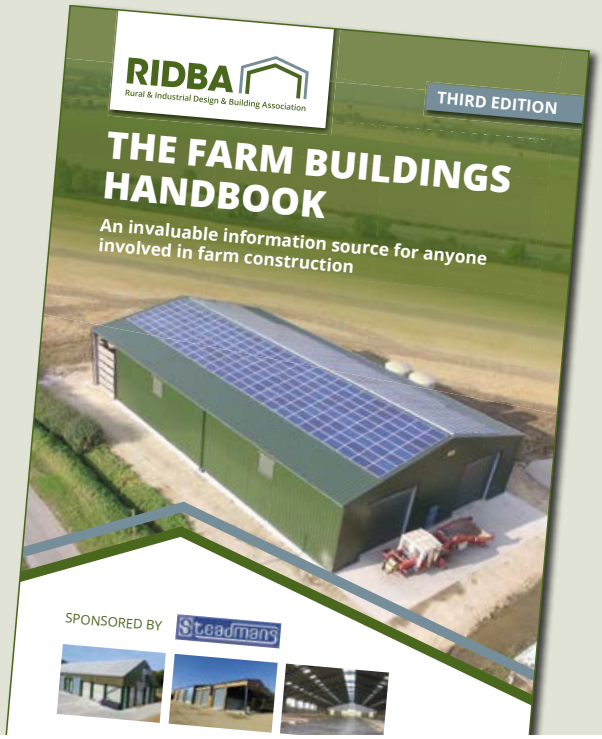

RIDBA
Rural & Industrial Design & Building Association

Why Being Part of a Trade Association Can Benefit Your Business

When times are tough, we know it is natural to review the outgoings and see where money can be saved. It is during these times that you can really make the most of your membership of a trade association. We have a look at the role of a trade association and why being a member of RIDBA can be important for your company.

Networking

In every industry, who you know matters, and trade associations like RIDBA are filled with potential contacts, clients and partners who can help your business move to the next level and become more prominent in your industry. The members of trade associations – particularly the more active members – are able to build long-term relationships and partnerships that are mutually beneficial. They provide a forum for like-minded individuals to come together to share ideas, strengthen ties, find new jobs and make connections that would not be possible without the association.

Knowledge and Training

Continued education and development is crucial in getting to the top of any industry. If your company is already a leader in the field, education is a key to remaining on top. Professional associations, like RIDBA, usually hold events with seminars and workshops that help members to learn and grow in their profession. Even outside of these official events, members have constant opportunities for peer-to-peer learning that allows members to share experience and knowledge.

Influence

One of the key benefits of joining a trade association is the ability to support the mission of the organisation and possibly influence legislation that affects the industry. RIDBA provides this opportunity through Build UK. The combined resources of the members of an association like Build UK can be used to lobby lawmakers more positively towards the goals of the association. With the increased level of government regulation in many industries including construction, this is an absolute necessity for the survival of all businesses in the field.

Information

Membership in a trade association means immediate access to any news or developments that affect your business and the industry. Outside of the usual communication of members to each other, RIDBA provides newsletters, email updates and informative resources that help its members stay on top of recent developments in the field.

Best Practices

Any line of work has a specific set of best practices that is vital to efficient, quality work. Especially for anyone new to the industry, membership in a trade association is vital to learning these practices and performing the best work possible. RIDBA has recently introduced a provisional membership category, designed to help companies starting out.

The fast pace of technology and market competition means that these practices are constantly updating and changing, and it is important to take advantage of any practices that can improve your business.

Exchange of Ideas

Not only do members have access to information about updates to the industry, they can also play a large role in determining these changes. Trade associations provide a forum for members to share ideas and develop new ways to improve the industry. This allows for more experienced members to help newer ones grow, and provides the opportunity for all members to share innovative ideas that can help the association.

Enhance your Reputation

Include your membership on your email signature, LinkedIn profile and company website. Doing this, you're declaring that you take your business seriously enough to spend time outside of office hours to learn more about the industry and participate in improving best practices. Whether you're an active listener or a do-er at membership meetings, it says something positive about you that you care enough to be there.

According to recent research, over 85 percent of businesses that fail are not members of a trade association. No matter the industry, trade associations give their members many advantages in a fast-paced, competitive world.

If you would like to join RIDBA or find out more about the benefits we offer, please contact **admin@ridba.org.uk** or phone 0844 249 0043.

The Planning Process: Use Animal Health as a Tool

The planning process is an integral part of any building design, and for the building supplier the job already starts at a strange beginning because too many clients (farmers) have a blurred vision of what their business needs are. Too many producers start with an image of a building and then work out what is going to happen inside the structure. It is at this point that the building supplier can significantly help their client, and guide the decision-making into a design that will help financial margins in livestock production.

There are other steps in getting the optimum design built, and working between the client and the planning authorities is another area where you can add value to the job. In the early days of environment impact assessments (EIAs) for the bigger pig, poultry and cattle building projects, our first point of contact after meeting the client was the local planning authorities. There was and still is an element of 'them and us' between farming business and planning, but this is a human world and my target was to find out as quickly as possible what the local planning issues really were. Visual impact? Smell? Noise? Traffic? Face-to-face dialogue also helped to act in a mediating role, and to disassemble emotional issues and replace them with facts. Modern designs should always:

- improve CO^2 footprint, reduce energy consumption (e.g. higher spec insulation) per unit output
- maintain and improve high health standards, reduce reliance on medications
- reduce noise output (mechanical ventilation systems), odour output
- provide sustainability of a local business, reduce food miles.

The irony is that it is the consumers and the supermarkets who drive this dialogue, but in fact it is the science at the production end of the business that makes the progress. The challenge for the building supplier is to influence the design of the project in a way that the client will pay and the planners will accept the outcome.

Visual impact

Out with diffuse pollution, the most likely conflict between design and planning is visual impact, either from bulk of a proposed structure, or ridge height, or cladding colour. In various parts of the country, for example in National Parks, the feeling is that farm buildings will stay locked in history because the restrictions on new builds are too numerous. The building supplier can massively influence the planning process by helping to align the two (apparently) opposing sides; the producer and the planning authority.

The visual perception of a building can be heavily influenced by cladding materials, changes in design height, use of overhangs that create shadows. If we start from the premise that what will work best for the livestock will work best for the business, the designer needs to be clear as to who the ultimate client is; the planner with the power to stop, the farmer with the purse strings, or the animal that has no say but which will pay all the bills for ever if the design is right?

Livestock require inlets areas in the sidewalls, but to date we don't know what colour they care for. If on the other hand, the planners insist on a dark colour roof sheet to 'hide' the structure, there is 100% certainty that this will increase solar gain and present predictable increased welfare risks. Pointing out that dark roof sheeting on poultry sheds will increase power requirements by more than 20% in the summer months is an objective fact that can help to inform the outcome of planning discussions. The same is the case for the ignorant insistence on shallow roof slopes on naturally ventilated buildings. The planners and the potential owners will make a much improved decision if they are given the facts around the impact of low roof slope. If ridge height is a sticking point, drop the eaves height before dropping the slope. I have yet to encounter a chicken, pig, sheep or cow that is more than 1.8m tall, but the industry still persists in promoting tall eaves heights as part of modern design.

Future proofing

The latest technical equipment, tractors and machinery, can be purchased according to annual profitability, but a building is typically for the very long term. Building suppliers/designers can add value by keeping an eye on the future trends. This not only improves the financial sustainability of a project but also (if promoted) increase the likelihood of support from the planners. As well as promoting society's aims for health and welfare, clean production, local employment, there are three areas to promote into design. The first is water use, and a modern farm business that does not consider rainwater harvesting is not paying attention to pressures building from society, environment and finance. Turning rainwater into dirty water is bad for business. The second is to be modest with the area of concrete hardstanding around buildings, and to create discrete areas for vehicle traffic. The aim is to reduce diffuse pollution. The third and latest area of external interest is ammonia production. There will be much stamping of feet about proposals to 'monitor' ammonia production from livestock farming, but the fun fact is that we have known for decades that good design of floors, drains and ventilation results is less ammonia at source, better air quality for the livestock, and less problems with disease. Imagine that; payback from good design leading to improved health and welfare and better profits...

Jamie Robertson, **Jamie@ridba.org.uk**

'The Red Book' ACR[M]001:2014 Test For Non-Fragility of Large Element Roofing Assemblies is based on this drop test (shown below) developed by ACR.

Making Roofwork on Industrial and Agricultural Buildings Safer

Graham Willmott, Chairman of the Advisory Committee for Roofsafety (ACR), explains the role of the organisation and its continuing crusade to improve working practices and minimise the risk of fall-from-height accidents

In 2017/18, 38 fatal injuries occurred on UK building sites, placing the construction industry among the highest contributors to workplace deaths. Of these, the majority were the result of falls from height. It's a sad fact that every one of those deaths was preventable, had appropriate measures been taken. Defining and communicating those measures is at the core of ACR's mission – and the organisation has played an important role in significantly reducing accidents to roof workers, since its inception.

ACR was founded in 1998 by HSE (the Health & Safety Executive), with the aim of establishing and promoting safe practice for the benefit of all individuals accessing roofs. Comprised of industry personnel for the safety of industry personnel, its role is not to legislate, but to safeguard.

Working with the HSE, the following major associations representing roofing trades and product manufacturers are represented on the committee:

BCSA (British Constructional Steelwork Association Ltd), BSIF, HSG (British Safety Industry Federation/Height Safety Group), EPF (Edge Protection Federation), EPIC (Engineered Panels in Construction), FASET (Fall Arrest Safety Equipment Training), HSE (Health and Safety Executive), IoR (The Institute of Roofing), MCRMA (Metal Cladding and Roofing Manufacturers Association), NARM (National Association of Rooflight Manufacturers), NFRC (National Federation of Roofing Contractors), **RIDBA (Rural and Industrial Design and Building Association)**, RTA (Roof Tile Association), SPRA (Single Ply Roofing Association), WAHSA (Work at Height Safety Association).

ACR was formed in response to HSE's requirement that in order to reduce accidents, all roofing products should be manufactured to be 'non-fragile' when fixed. However, at this point 'non-fragility' had no specific definition – or a test procedure by which to establish it.

In order to address this dilemma, working to physical requirements established by HSE, the newly-formed ACR started work on a test procedure by which non-fragility could be defined. This constituted a drop test of a sandbag falling onto a roofing assembly fixed to a defined test rig at ground level, that simulated the same effect as a heavy person walking then tripping and falling on to a roof surface.

The conclusion of the work was written up in the first publication of the ACR, entitled 'ACR[M]001:2014 Test for Non-Fragility of Large Element Roofing Assemblies'. Now in its fifth edition, this document has since provided the HSE approved UK testing and classification system for non-fragility of roofing assemblies, providing the clear benchmarks for manufacturers and installers to meet the required standards.

Since the publication of 'The Red Book', ACR has further broadened its commitment to roof safety, with the publication of a series of other widely referenced guides to safe working practices in all aspects of roof work, from the role that designers can play in limiting hazards, to the management and supervision of work at height.

An example is the 'The Green Book' ACR[CP]002:2017 'Safe Working on Fragile Roofs or roofs with fragile elements – now in its third edition. This document is of particular relevance to the rural and industrial building sector, in which the majority of roofs are of profiled metal or fibre cement construction. It is intended to give health and safety advice on how to control the risks involved in working on fragile roofs and is aimed at informing all parties involved in roof work, from product manufacturers to construction and maintenance workers, as well as building owners and property managers. It describes safe practices and procedures to adopt for inspections, refurbishment, repair and replacement of fragile surfaces and recommends acceptable safe techniques to employ to comply with the Work at Height Regulations 2005.

Other ACR publications cover specific topics including the use of safety nets, edge protection and the use of safety lines. These topics and publications will be covered in subsequent articles.

A key part of ACR's remit is to share its broad knowledge and provide free, easy access to its publications. A new ACR website has recently been launched with this in mind. The website provides downloadable copies of all ACR publications; a comprehensive section providing answers to frequently asked questions; and full listings of committee members and the organisations they represent. Latest news from the ACR can also be accessed here, as well as contact details.

The individuals comprising the ACR work on a voluntary, unpaid basis, with selection by the committee, based on experience and qualifications across a wide range of roofing-related disciplines. Their immense contribution to reducing the incidence of serious accidents in our industry is to be applauded.

For further information about ACR, please visit: **www.the-acr.org**.

Refurb & repair problems – solved!

Replacement rooflights to match any profile

Warehouse, Heathrow

GRP barrel vault roof-lights – perfect for curved roofs

Distribution Centre, Kent

Lightweight GRP over-roofing

Water company depot, Yorkshire

Simpler, more cost-effective roof refurbishment

Industrial Unit, Wiltshire

Safer rooflight replacement with no roof access

Factory, Middlesex

Roof refurbishment and canopies

Byker Wall Estate, Newcastle-upon-Tyne

All these diverse, demanding refurbishment challenges have one thing in common. In each case, the solution was a specifically designed GRP sheet or associated product supplied by Filon Products: the building envelope refurbishment problem solver.

...please call us for details or to discuss your project, on **01543 687300**

FILON®

Filon Products Ltd, Unit 3 Ring Road, Zone 2, Burntwood Business Park, Burntwood, Staffs WS7 3JQ

www.filon.co.uk

Building Standards for Cleaner Air

You may recall last year I wrote about Defra's Clear Air Strategy consultation and that we could expect to see developments resulting from it in the New Year. The UK Government is committed to internationally agreed, binding targets for improving air quality through the reduction of emissions from industrial, commercial and domestic activity. Poor air quality is one of the UK's biggest public health challenges.

The Clean Air Strategy was duly published in January this year. Several areas of agricultural practice are being targeted by new legislation to reduce ammonia emissions, such as fertiliser use, manure applications and the requirement for dairy farms and intensive beef farms to be permitted, in a similar way to large-scale pig and poultry farms currently. New regulations relating to design standards for new livestock buildings are also to be included as part of the Strategy.

The Strategy suggests 'mandatory design standards for **new intensive poultry, pig and beef livestock housing and for dairy housing**.' It goes on: 'The standards will be designed in collaboration with industry experts and will include design features to improve animal health and welfare and minimise environmental pollution to air (including greenhouse gas emissions), water and land as far as practicable'.

Defra has not given any indication as to what design standards are being considered but we have some insight from measures that have been introduced in Holland. Contaminated floors are an important emitting surface so Dutch research and developments have focussed on producing a clean dry surface to reduce emissions. There is an added benefit for both farmer and cow in improved cow foot health.

So, effective drainage is key to reducing emissions from livestock housing. Sloping floors with grooved drainage channels have been adopted widely in Holland to meet tight ammonia emission limits. We can expect this approach to be part of any new, mandatory design standards introduced by Defra's new legislation. There has been no timescale attached to this element of the Strategy, only a commitment to consult with industry as quickly as possible.

Another area being considered for emission reduction is slurry storage. The Strategy indicates that all slurry and digestate stores should be covered by 2027, with the intention to require digestate stores and larger slurry stores to be covered 'by an earlier date'. This has implications for all storage infrastructure being planned currently as it should be capable of supporting a cover at some point in the near future.

Environment Agency permitting requirements for larger scale pig and poultry units have included emission limits from its introduction more than a decade ago. These limits are still based on pig unit performance data and emission factors that are more than 20 years old. Advances in pig breeding and nutrition as well as developments in housing systems mean that these figures are not representative of most modern pig units.

Trials recently completed by the AHDB suggest that emission factors are appreciably lower than two decades ago and these findings will be submitted to the Environment Agency for consideration in the next review. Following these encouraging results, the AHDB has commissioned further trials in seven different pig housing systems, monitoring ammonia emissions over the next 18 months. The housing systems covered by the trials include free farrowing solid floor systems, weaners on solid floors, finishers on solid floors, and finishers on fully slatted floors. The EA will also look at the data from these extended trials as national emission factors are updated.

Still in the pig sector, AHDB is currently conducting a large-scale survey of producers to gather information on the age of existing infrastructure and what affects their investment decisions. This will hopefully give some insight into their future investment plans and the expected rate of infrastructure renewal or expansion. More about the outcomes when the survey is completed.

David Ball, Senior Manager, Environment and Buildings, Agriculture and Horticulture Development Board (AHDB)

See **ahdb.co.uk** for more information.

HSE Annual Workplace Figures Released

The report from HSE provides headline numbers on workplace fatal injuries that were reported to enforcing authorities in 2018/19. It includes both fatal injuries to workers and to members of the public. The figures are currently provisional and will be finalised in July 2020 to take account of any necessary adjustments.

Fatal injuries are thankfully rare events. There is a degree of chance and randomness to the annual count resulting in an element of natural variation from one year's count to the next. To allow for this natural variation, alongside figures for 2018/19, the full report also presents the annual average estimate for the five years 2014/15-2018/19, which reduces the effect of year-on-year fluctuations and gives a more stable current picture.

The figures make up part of a long running series enabling both short and long-term comparisons of change. The information includes only those cases of fatal injury that the enforcing authorities have judged as meeting the reporting criteria as set out in the Reporting of Injuries, Diseases and Dangerous Occurrences Regulations (RIDDOR).

A total of 147 workers were killed at work in Great Britain in 2018/19. Although this represents an increase of 6 fatalities from 2017/18, it is possible that this change can be explained by natural variation in the figures. In statistical terms the number of fatalities has remained broadly level in recent years – the average annual number of workers killed at work over the five years 2014/15-2018/19 is 142.

There are two ways of looking at fatality numbers. The first is to look at the absolute count. On this basis, construction and agriculture, forestry and fishing tend to come out worst as they account for the greatest number of fatalities each year.

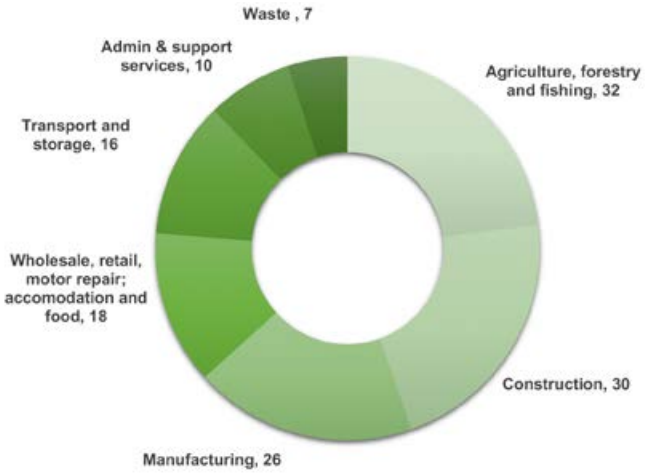

The number of fatal injuries in 2018/19 for each of the main industry sectors is broadly in line with the annual average over the last five years. However, numbers can be prone to year-on-year fluctuations.

The number of fatal injuries to workers in construction in 2018/19 (30) is the lowest number on record, a similar number to the previous low in 2016/17 (31). However, the number has fluctuated over the last five years ranging between 30 and 47 (in 2015/16).

Around three-quarters of fatal injuries in both 2018/19 and the combined five-year period 2014/15-2018/19 were accounted for by just five different accident kinds (see figure below). Falls from a height, being struck by a moving vehicle and being struck by a moving, including flying or falling, object continue as the three main causes of fatal injury, between them accounting for over half of all fatal injuries each year since at least 2001/02.

In 2018/19, 40 fatal injuries to workers were due to falls from a height. This compares to 35 in 2017/18 and an annual average over the period 2014/15-2018/19 of 36.

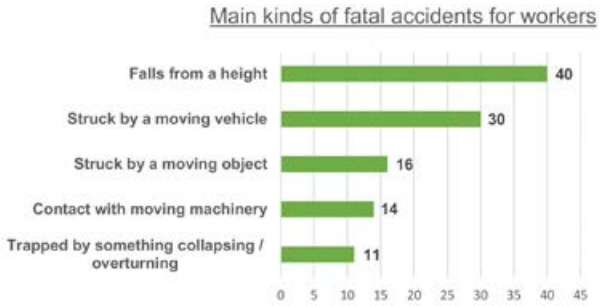

Being struck by a moving vehicle accounted for 30 fatal injuries to workers in 2018/19 compared with 24 in 2017/18 and an annual average of 27 over the period 2014/15-2018/19.

The number of fatal injuries caused by being struck by a moving, including flying or falling, object has fluctuated between 15 and 23 over the last five years, with an annual average of 18 over the period 2013/14-2018/19.

Over a quarter of fatal injuries in both 2018/19 and the five year-period 2014/15-2018/19, were to self-employed workers working mostly in Agriculture, forestry and fishing and Construction but also in other sectors including (but not restricted to) Manufacturing, and Administrative and support service activities (such as renting and leasing activities and services to buildings and landscape activities).

The full report can be found at:
http://www.hse.gov.uk/statistics/pdf/fatalinjuries.pdf.

Kingspan Extends Safety Systems Range

Kingspan Insulated Panels has launched a selection of protective barrier and guard rails systems designed to shield people and structures from moving machinery, such as forklift trucks. Joining its established fall protection systems, these new products complete the SafeDefence range.

Manufactured from high-density polyethylene positioned around a single metal support, each product has been tested and certified to deliver superior impact resistance while also preventing damage to the floor surface on impact thanks to their robust design and simple installation. The range includes:

- KPSPost for the protection of walls, doors and corners;
- KPSTrim impact resistant plinth for protection at the base of building corners, columns and walls;
- KPSRail for the protection of people in areas where forklifts and other mobile machinery are active;
- KPSBarrier-S, KPSBarrier-D and KPSBarrier-H to protect walls, columns and other objects at varying heights.

Their straightforward construction and independent installation make them easy and economical to repair and replace. Furthermore, they are easy to clean and comply with food safety standards, making them an ideal solution for the agri-food industry.

All Kingspan SafeDefence systems are supported by comprehensive technical and field services and training from Kingspan Fabrications, Safety & Lighting Solutions, a fully integrated product portfolio from Kingspan Insulated Panels.

For further information, please contact:
Tel: +44 (0) 1352 717 251
Email: **safety@kingspanpanels.com**
Web: **www.kingspanpanels.co.uk**

Kingspan SafeDefence Barrier Protection Systems are designed to protect people and objects from the impact of mobile machinery.

Eternit Launches New Metal Substructure Fixings for Light Gauge Steel

Fixings engineered for purpose improve building performance

To complement its existing range of wood substructure fixings, British fibre cement profiled sheeting manufacturer Eternit has launched fixings for light gauge steel. Andrew Brown, Technical Services Manager – Eternit Profiled Sheeting said the new fixings are designed for installing Profile 6 semi-compressed fibre cement sheeting to steel purlins that are 1mm to 2mm thick.

"With 1.1mm thick steel purlins now being designed for agricultural buildings, Eternit have introduced fixings that have been specifically designed for thinner purlins," says Brown.

Eternit's fixings for light gauge steel are available in both carbon steel and stainless steel. "Stainless steel metal substructure fixings for light gauge steel are capable of resisting years of corrosion from salt and chemicals in harsh conditions," explains Brown. "This will help maintain the buildings integrity throughout its lifespan."

Along with being comprised of high-quality materials, the metal substructure fixings for fibre cement are self-drilling for quick and easy installation. The head of the fixing is also designed for easier installation.

Improving logistics

According to Eternit National Sales Manager Grant O'Donnell, the fixings for light gauge steel simplify product sourcing and ordering, while eliminating project downtime.

While fixings can be ordered separately, the ability to include them with your direct to site order of Profile 6 semi-compressed fibre cement sheets can help to reduce admin issues caused by sourcing materials from multiple suppliers.

Eternit's fixings for light gauge steel are available in boxes of 100. To find out more, visit **eternit.co.uk**.

AJ Lowther Invests in Kaltenbach Automation

AJ Lowther & Son is based in Herefordshire and supplies buildings across the country, specialising in steelwork and cladding. The company is three years into a four-year investment plan spending on people, premises and equipment to ensure that they remain competitive into the future.

Having increased the workforce by over 20% (with an emphasis on apprentices and the drawing office), extended the workshops and opened a new office in Wiltshire, the latest acquisition has been an integrated Kaltenbach KDP1036/KBS1051 beam processing line.

The new machine has not only delivered huge improvements in handling, cutting and drilling times, but it automatically scribes directly onto the steel the position of all cleats and brackets, mills slots and copes flanges as well as processing steel 'lights out' after the staff have gone home.

Managing Director, Antony Lowther explained the thinking behind the purchase: "the Kaltenbach has allowed us to increase production, but more importantly, it has lowered our cost per ton of fabricated steel. When it comes to production of steelwork efficiency, productivity and accuracy are always key and that is what the Kaltenbach gives us. And, of course, can you imagine the grin on my face when I am sat in my office listening to that machine processing steel knowing the operator has already gone home!"

The next part of AJ Lowther's plan is to invest further into Solar PV to ensure the company is carbon positive by the end of 2020.

More information on the Kaltenbach KDP can be found at **https://kaltenbach.co.uk/machinery/profile-drilling-machines/ or by contacting sales@kaltenbach.co.uk**.

AJN Steelstock – Supplying the Farming and Agricultural Sector for over 50 years

As one of the largest steel stockholders in the UK, with two major stockyards in Newmarket, Suffolk and Henstridge in Somerset, AJN Steelstock prides itself on its ability to offer a first class service to the farming and agricultural sector.

We hold over 30,000 tonnes of steel at our two sites and operate a fleet of over 60 vehicles working 24 hours a day to fulfil the exacting requirements of our customers. We make our customers' deadlines, our deadlines. So we don't just deliver steel to site, we deliver it to where you want it, when you want it and crucially, how you want it.

Do we offer in-house sawing? Yes. How about shot blasting and painting? Yes. What about CNC drilling and plasma cutting? Our machines are state-of the art, so yes. Whatever processing and finishing you require, we can do.

Providing this level of service and commitment on demand, and covering the whole country, requires an on-going commitment to a programme of major investment. Take our investment of around £1.25 million in two Bystronic ByStar Fibre 4020 6Kw laser machines – one for Kentford and one for Henstridge - as an example of our commitment to the highest levels of customer care and service.

The machines offer 'best-in-class' performance and reflect our commitment to making a significant investment into AJN where there is a clear need, coupled with customer demand. The other significant, welcome but unintended consequence is that we continue to out-class and outperform the competition.

Each high-speed laser delivers 6Kw of laser cutting power for unparalled parts out-put. Large batches using a wide variety of metals can be cut in record time. The cutting area is easily accessible, which is a huge advantage as it means that urgent jobs can be inserted even in the middle of high-volume runs.

AJN's finance director, Courtney Bell said: "We see the £1.25 million very much as an investment both in the present and the future. Both machines are working hard on current orders and we can only see demand for their high-speed performance growing in the future."

For more information visit **www.ajnsteelstock.co.uk**.

I Bailey Steel Buildings – A Family Run Business

I Bailey Steel Buildings is a small, family run business with over 30 years steel erecting experience. Ian Bailey, the Company Director and Steel Erector worked in the family business until three years ago, when he took over and it became a limited company.

Since the take-over in August 2016, I Bailey Steel Buildings has gone from strength to strength. The company has a large, long-standing consumer base and has worked hard to gain new clients too. The launch of the company's first website at Christmas 2018 has supported the company's expansion and growth.

Our success comes from establishing good customer relationships through reliability, hard work, and high standards of craftsmanship and quality materials. We pride ourselves on providing high-quality, purpose built agricultural and industrial steel-framed buildings. All of our buildings are of the highest quality and supplied by Deville and Lear who have over 65 years' experience in designing and manufacturing steel frame buildings.

2019 has seen the company's most successful year to date, with it being given the opportunity to help construct and adjust buildings to create an Open Adventure Farm in Penkridge, Staffordshire.

This was a new type of project that we are proud to say that we have been a part of. We are looking to expand and develop this area of work in the future, to enable us to develop our portfolio and expertise further, on more Open Adventure Farm projects, as well as Industrial buildings.

I Bailey Steel Buildings works on a wide range of projects, from small repair jobs to building large livestock sheds, play barns and grain stores, milking parlours, storage sheds, to lean-to buildings and much more. We also provide a renovation service to repair or renovate existing buildings, including extensions and can also offer a foundations and erection only services too.

We are able to offer the full range of services for Industrial and Agricultural buildings. This includes full consultancy, design, installation and project management. We cover the whole of the East Midlands including the counties of Staffordshire, Leicestershire and Derbyshire as well as Birmingham.

I Bailey Steel Buildings will be happy to provide you with a free quotation and offer support and advice on any future projects, so please do not hesitate to contact us by email or telephone if we can be of any assistance.

Visit **ibaileysteelbuildings.co.uk**.

I. BAILEY STEEL BUILDINGS LTD
AGRICULTURAL & INDUSTRIAL BUILDINGS

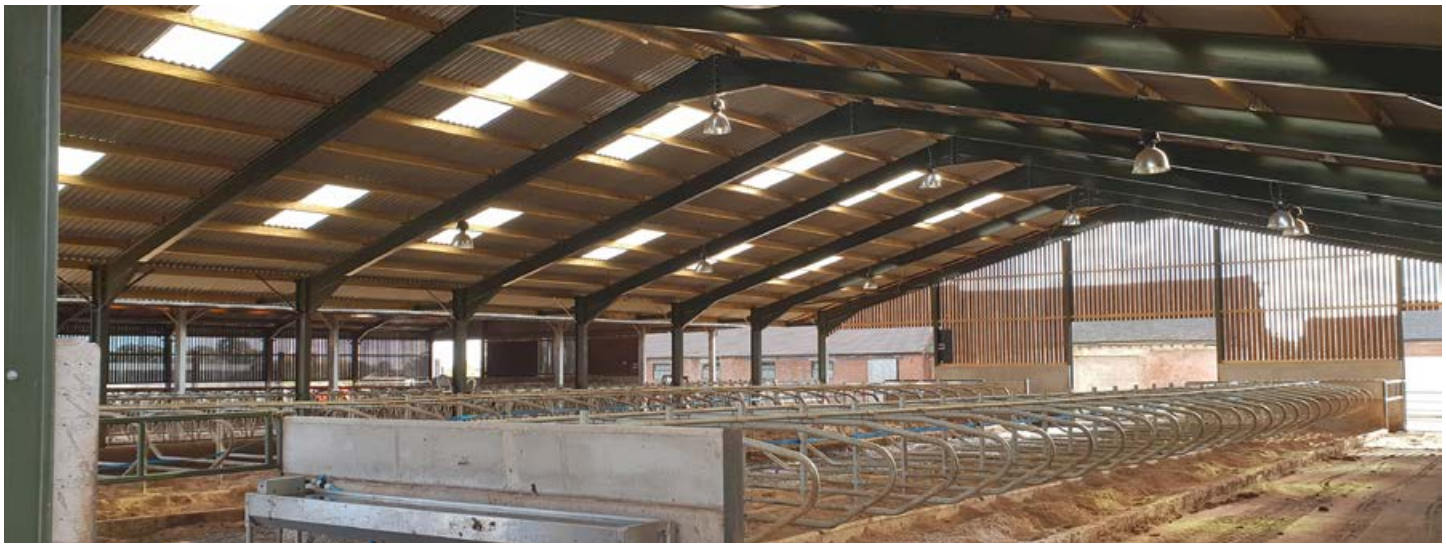

The University of Nottingham's Centre for Dairy Science Innovation

HASTON REYNOLDS
CHARTERED SURVEYORS

In 2015, the University of Nottingham decided that the existing farmstead located at their Sutton Bonington Campus required updating and expanding.

Haston Reynolds Ltd was commissioned to oversee the planning and design of the scheme and to project manage construction of the new buildings which would facilitate an increase in the size of the milking herd from 240 to 360 cows. The new facility was designed to exceed current recognised industry standards in dairy farming in order to demonstrate how innovative design combined with the very best practices, particularly in health and welfare, could improve milk yields, increase productivity and yet provide a flexible platform for research projects.

Main Features of the Dairy Unit

Cubicle Bedding and Floors

From the outset, the project steering group wanted to use sand as a bedding material as it is now widely accepted amongst academics and farmers as the gold standard for cows housed in a cubicle based system.

Slatted floors, which are common in the dairy industry for other bedding materials, cannot normally be used with sand, but have great advantages for farm management and animal cleanliness. When combined with automated and robotic scraping systems they also have the potential to reduce ammonia emissions from the slurry when compared with other floor types. One of the many challenges was therefore to design the buildings with slatted floors so that sand bedding could be used.

An innovative system of below floor channels with automated cable operated scraper sledges was designed based on technology used in Denmark, to scrape sand laden manure over a distance of 95 metres to automated cross channels containing mining industry type augers. This then deposits the manure into the separation and handling system.

A unique sand laden manure separating and handling system was then designed to allow the sand to fall out of suspension using a sand lane and settlement tank that provide very economical and simplistic separation and handling of the sand, fibre and liquids for storage. The sand can then either be used as fertiliser or washed and re-used as bedding.

Milking

The University has employed robotic milking of its dairy herd since 2002, however, in this new set-up, the state-of-the-art automated milking system combined with the way the robots are integrated into the overall layout with the cow handling system allows for much greater levels of hygiene and cow comfort but also facilitates easier access for students and academics to study individual cows, animal behaviour, veterinarian practices, animal nutrition, health and welfare.

Environment

Very high quality internal building environments are designed to provide high levels of natural ventilation using single clear span structures, steep roof pitches of 22.5° and large bespoke ridge lights which promote and support stack and wind effect ventilation. Due to the roof pitch, the height between inlet and outlet can be up to 13m which significantly aids stack effect. Side walls are fitted with automated ventilation curtains which act as variable air inlets and are controlled by internal and roof mounted meteorological sensors.

The University championed the use of large loafing areas between cubicles in order to allow more social activity and reduce stress and bullying bought on by more confined internal layouts.

Feeding Research

An automated and computerised feeding system for one herd group in order provide fully automated mixing and control of roughage intake for feed nutrition trials. Feed is delivered to individual troughs using a feed wagon running on a rail system. A variety of forages and additives can be automatically premixed at a feed kitchen, which consists of forage bunkers, conveyors and a static mixer.

Results

Quite simply, the results have been extremely impressive. Farm staff and the University academics have been truly amazed by the improvements they have witnessed in the health and productivity of the herd.

Average milk yields have increased from 31 litres a day to 42 litres a day. This can only be attributed to the new building environments because there haven't been any nutritional changes to the diet of the herd. Cow visits to the automated milking systems have increased from an average of 2.8 to 3.5 visits a day. The fertility of the herd has increased with the 21 day pregnancy rate increasing from 14% to 21% and mastitis has decreased from 50 cases per 100 cows to 15 per 100 cows. Digital dermatitis and hock legions have been extremely rare and the buildings have been noticeably cooler and the atmosphere drier over the very warm summer of 2018; none of the cows having shown any signs of heat stress.

The facility therefore demonstrates that a new level of dairy farming can be achieved if others want to follow the innovative design-led example of the University of Nottingham.

The Inspiration Behind 'BE, Well' at Clerkenwell Design Week

We recently spent four days at Clerkenwell Design Week, showcasing the aesthetic beauty and sustainable benefits of galvanized steel, with the 'BE, Well' installation in St. John's Square. The 9 x 3 x 4m pavilion shaped structure was built as part of a collaborative project between partners Haines Watts (who sponsored the project), WR-AP Architecture, John Cullen Lighting, Lionweld Kennedy, Berry Systems, and Joseph Ash Galvanizing. The event was a great success, with many people stopping by to interact with the installation and leave their 'thought of the day' in the well.In a week forecast for rain, we were also amazingly lucky with the weather. The sun shone all week, the steel glistened, and visitors to the event were able to enjoy all the Clerkenwell designs, inside and out, at their very best.

As we've now come to the close of such an amazing project, we thought we'd share some of the thoughts behind the installation from Sean Weston and Max Rengifo at WRAP Architecture, the architects leading the project.

Why were you attracted to the project?

As an emerging architecture practice, we were excited to participate in Clerkenwell Design Week – such a renowned international design festival – and be given free reign on the design content by our sponsoring partners Haines Watts. Also, many of the installations at Clerkenwell Design Week in previous years had focused on the craftsmanship synonymous with the area. With our design we felt it was an interesting opportunity to focus on a more finite aspect of design and to work with one specific material – galvanized steel – to showcase its potential to the design world and to allow an alternative type of craftsmanship to be featured.

In a few words, can you describe the installation and its defining features?

The 'BE, Well' pavilion is an investigation into the design potential of galvanized steel. In an age where sustainability is on the agenda of all design disciplines 'BE, Well' showcased the whole life longevity and potential beauty embodied in the galvanising process. The pavilion took visitors on a journey from utilitarian building products through to bespoke architectural elements, all showcasing the detailed beauty of galvanising.

As Clerkenwell Design Week was celebrating its 10th anniversary, the pavilion featured a galvanized steel well as its centrepiece. We felt this was important as it would remind visitors that Clerkenwell originally had a well (hence the name!). The well within our installation acted as a place where visitors were asked to comment on the design industry, or simply leave their 'thought for the day'.

What were your biggest challenges during the project?

The biggest challenge we wanted to overcome was to ensure that a material – galvanized steel – that is usually used in either a utilitarian or industrial manner could be showcased with finesse and elegant detailing to promote its innate aesthetic properties. We believe we achieved this with the 'BE, Well' installation.

What is the meaning behind the pavilion's name 'BE, Well'?

The 'BE, Well' name represented all the good things that the pavilion characterised: the protection and long-life expectancy that galvanising provides to steel; and a new physical well for Clerkenwell to attract positive thoughts about the design industry, Clerkenwell Design Week, or simply good 'thoughts for the day'.

Partnership roles

Haines Watts London, a top UK accounting firm, sponsored the project. With decades of experience working with some of the UK's most prestigious architecture firms, they wanted to share their support for the architecture industry by sponsoring an up-and-coming young architecture practice to design the installation.

They chose WR-AP Architecture as the designers, a young London-based practice set up by Sean Weston and Max Rengifo in 2018, which specialises in creating beautiful buildings with delightful, memorable and enjoyable experiences for their clients and the environment.

As the installation was made from steel, Joseph Ash Galvanizing protected the metal using a batch hot dip galvanizing process from one of our plants.

Joseph Ash Galvanizing is part of Hill & Smith Holdings PLC. Two other companies within the Hill & Smith group – Berry Systems and Lionweld Kennedy – also made up the partnership. Berry Systems fabricated the steel, and Lionweld Kennedy fabricated the mesh grating.

The final company in the collaboration was John Cullen Lighting, the award-winning lighting specialist, who enhanced the installation with a variety of stunning lighting techniques.

FIBRE CEMENT ROOFING SPECIALISTS

UK'S LARGEST STOCK OF FIBRE CEMENT ROOFING AND ACCESSORIES

BRIARWOOD PRODUCTS LTD

01934 641 446 | BRIARWOODPRODUCTS.CO.UK

SUPPLYING BRITISH FARMERS FOR 40 YEARS

- No order is too big or too small
- Orders from 1 sheet to 10,000 sheets
- Covering all you roofing needs: Guttering, Purlins and Fixings
- Dedicated and experienced team
- Expert advice for lifetime of your project

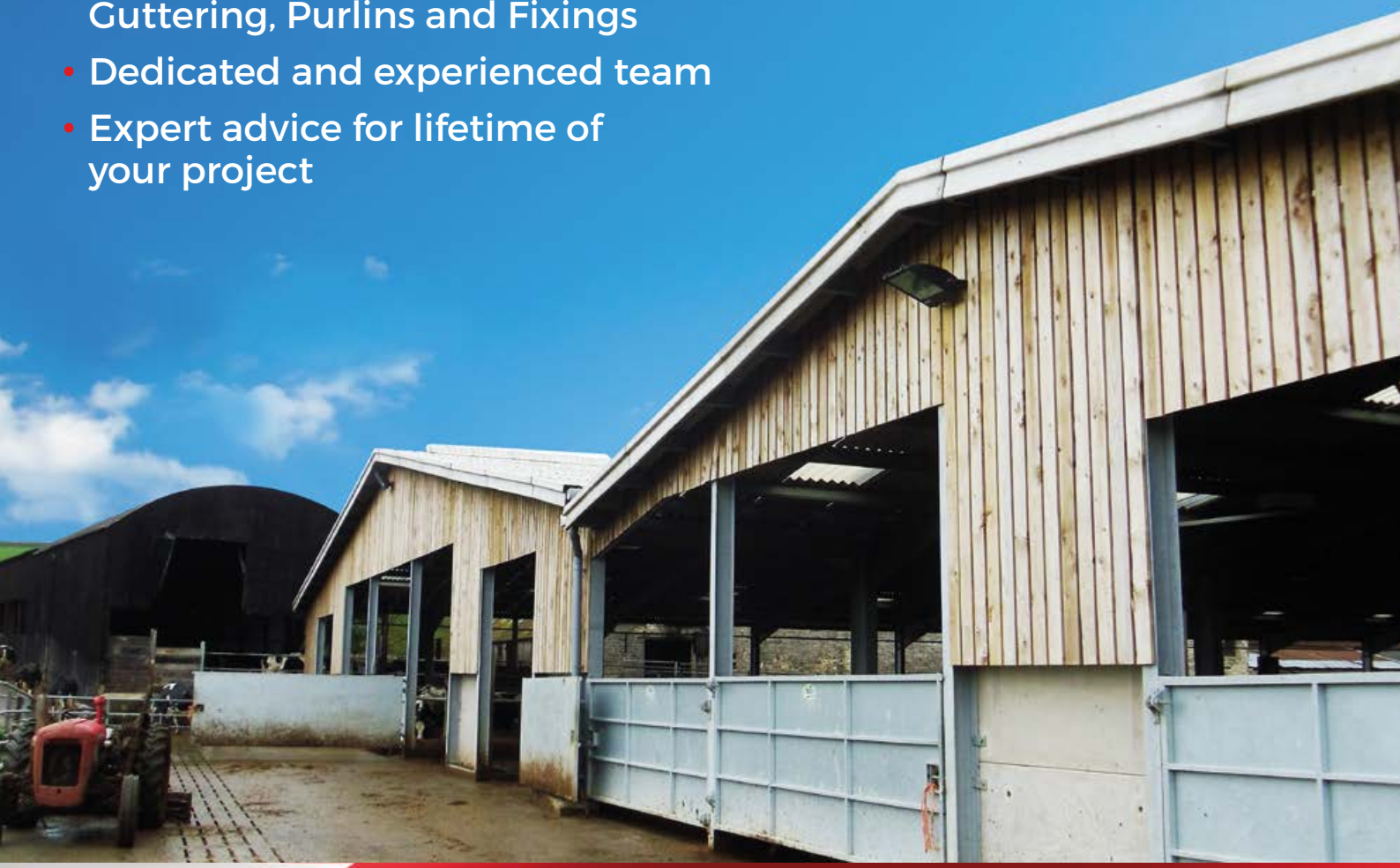

BBA CE RIDBA Rural & Industrial Design & Building Association

EUROSIX Provides Cover for Woodchip/Biomass Building and Grain Store

Over 3,000m² of Natural Grey EUROSIX fibre cement sheeting was provided by Briarwood Products to house a woodchip/ biomass storage bunker and support a biomass boiler for the drying of grain using underfloor heating via this renewable energy source. This interesting project consisted of a specification of triple span duo pitch grain stores and machinery buildings, all of which were able to be supplied in full and from stock by Briarwood Products.

This new project in Worcestershire has fully embraced the renewable energy revolution to the full. At this location they have installed woodchip biomass boilers along with underfloor heating and multi-heat heat exchangers.

The moisture content in some buildings along with heat and vapours produced by the raw materials is the perfect reason why a EUROSIX fibre cement sheet has been specified here. EUROSIX fibre cement roof sheeting has natural resistance to chemical attack, reduces condensation forming, is rust free and has a natural ability to assist ventilation as well as being a low maintenance product with a long life expectancy.

High performance biomass boilers are only as good as the fuel they burn. Anything other than virgin wood with no more than 25% moisture content will have a negative impact on the kWh output. 25% moisture content (+/- 2%) ensures the fuel burns cleanly and efficiently and results in higher kWh output and higher calorific value per tonne. Woodchip with little or no moisture content burns too rapidly and woodchip with more than the recommended moisture content reduces the power output and causes excessive tarring, ash production and emissions.

EUROSIX reinforced fibre cement sheeting is available in a full range of colours and in all sheet sizes with a complete range of fittings and ventilation systems to support any agricultural building specification, so you will have no need to restrict the design of your roof. The full EUROSIX range of fibre cement sheeting is all BBA Approved and manufactured under QS ISO 9002 and also covered by CE certification. Briarwood Products is proud to support all areas of the agricultural sector with a wide range of products.

For further information on this visit the website **briarwoodproducts.co.uk** or contact Briarwood Products office directly on **01934 641446** where we will be very happy to discuss any requirements you may have.

New State-of-the-Art Rearing Farm for Aviagen Turkeys

Established in 1998, family run business Powell & Co. is proud to be one of the UK's leading manufacturers of commercial poultry housing and agricultural buildings, dedicated to designing and building the best solutions for modern poultry production.

Father and son team, Don and Jason Powell deal with businesses of all sizes in a variety of locations and across a range of sectors. Operating from Kingsland near Leominster, Herefordshire, the team of 75 employees provide the complete solution from initial design and planning right through to bird delivery.

Last year the business was awarded a contract by Aviagen Turkeys to build six new state of the art turkey houses on a greenfield site in North Wales. Aviagen Turkeys is the global leader in turkey genetics selling the B.U.T. and Nicholas breeds, recognised around the world for their quality and superior performance. Their extensive product portfolio provides customers with a substantial choice of market-leading products to suit each customer's specific operations and requirements. As well as selling turkey parent stock, Aviagen Turkeys also owns distribution businesses producing and selling commercial turkey eggs and poults. With over 27 farms and two hatcheries in the UK, the company is investing heavily in facilities and Research & Development programmes.

As a major supplier of turkey breeding stock throughout Europe and other parts of the world, the business has a responsibility to maintain its flocks at the highest possible health status in order to prevent the vertical transmission of poultry or zoonotic pathogens down the supply chain. In addition, Aviagen Turkeys ensure good geographical distribution of the pedigree populations to guarantee the security of the different pedigree and gene pool lines.

The need to continually improve the biosecurity of farms and the increased breeding requirement has led to a strategy to upgrade, or replace the existing pedigree rearing farms to incorporate enhanced biosecurity infrastructure and to provide purpose-built facilities for the new and expanded pedigree selection activities.

The latest step in the upgrading of Aviagen Turkeys pedigree rearing facilities is the construction of a new state-of-the-art rearing farm outside Llay near Wrexham. Fully commissioned in January 2019 the site is a high biosecurity facility with all buildings linked together to ensure that once personnel have showered into the site, they remain inside. Particular attention has been given to the procedures and facilities for receiving deliveries such as bedding material and for ensuring that biosecurity is maintained during the loading-out of birds.

Aviagen chose Powell & Co. based on recommendation and visits to other sites which demonstrated the high quality of finished buildings. Covering over 7,800 square metres, each shed measures 64.6m long by 20.3m wide with external walls to 2.59m high. The 15° roof pitch has been designed with an allowance of 15kg/m2 made for all feeders, drinkers, heaters, fans and lights to be suspended from the roof in each of the 12 rearing unit sections. The roof has been cladded with 0.5mm thick polyester painted box steel sheet in Vandyke Brown colour to meet the local authority planning regulations. Insulation of the roof has been completed with 200mm thick fibreglass insulation quilt with additional shelter board insulation on the underside of steel rafters to prevent cold bridging.

A key design feature is the constructed link corridor running through the centre of each poultry house, dividing the six units into twelve. The corridor is connected to a 216m2 amenity block containing a canteen, storage, stores and shower facilities, and is designed to maintain the high levels of bio security required for accessing any batch of turkeys. The corridor situated between houses 1 and 2, 5 and 6 features a half-glazed fire door, along with non-opening windows between houses 2 and 3, 4 and 5.

"We were very pleased with the willingness of Powell & Co. to respond to our specific design requirements which are required to maximise biosecurity and to ensure the "cleanability" of the buildings to facilitate the highest standards of cleaning and disinfection", adds Kenton Hazel, Director of Production and Veterinary Services.

Specific design features ensure that each of the six building constructions are air tight and light proof, enabling excellent environmental controls to be in place throughout the rearing programme. The buildings have already performed very well for the batches of pedigree turkeys reared since January. The units satisfy all environmental conditions necessary to rear the birds, and to carry out pedigree selection activities.

"Powell & Co. has produced a farm that not only meets our needs and expectations, it exceeds them. Being a primary breeding company, places demands on our buildings not normally encountered in the commercial world. The team at Powell & Co. has provided us with an environment which is easy to manage", concludes John Canfield, Rearing Farms Manager.

The Presentation Problem

It's interesting to consider how many, or perhaps, how few people visit dairy farms regularly. After 20 years of driving all over the UK and parts of Europe and the States, Ivor Davey has some interesting thoughts on the dairy sector.

Mr Davey set up CowPlan nearly 5 years ago, after working for Wilson Agriculture as a housing specialist. Ivor says: "Recently I have been involved in a lot of new building designs. These vary from additions to existing dairy enterprises, conversions of older buildings and new green field sites".

When working on the greenfield sites, it is interesting to hear of the type of units being built. "Specialising in independent robot designs, we have obviously worked on 365 day housed units pushing very high yields. We have also worked on grazing robot units, and increasingly extensive self-feed new builds. These farms vary from aims of 5,000 litres per year to aiming for over 13,000. This gives an insight into the dairy sector in the UK and the exciting mix of opportunities available."

We asked about the key considerations for new builds and farm infrastructure developments you work with:

CowPlan asks every client discussing new buildings to consider these five principles:

1. Any new building must be high welfare, putting the cows first
2. It must be attractive to all milk buyers, so that when they visit they want to buy your milk.
3. It must be presentable to the public. In times of challenging public perception, think about what it looks like, the approach and presentation so that we are all positively promoting the dairy sector.
4. It must be pleasing for the bank manager!
5. It must be something that you, as the farmer, are proud of and love to come home to.

As part of these considerations, CowPlan is positive in presenting the dairy sector on all their social media outputs (@cowplan).

Mr Davey says:

"I have a mother-in-law who has been a vegan for over 50 years. This is interesting as she is one of my biggest supporters and often challenges me on what we are doing and the ways cows are kept. Some of the photos I want to show, she criticizes and makes me consider the level of welfare we have started to accept! Are we doing a good enough job really? The public are our customers and they should all be proud to buy our dairy products. All aspects of the dairy sector are critical in promoting our products honestly, and to as high a standard as we can"

Part of the way CowPlan is challenging the presentation of the industry is not just pushing cow comfort and welfare in all buildings, but considering the design of the buildings. Recently this has meant creating 3D fly throughs of new builds and showing 3D drawings of the finished facilities. Mr Davey says "This can really help the farming family or business share the vision with partners, planners and the public." A recent example of this is the Beckside development of new cow cubicle shed and rotary parlour on a green field site in Cumbria (**www.cowplan.com/beckside**). From application to planning permission was just 12 weeks for this major development and CowPlan's 3D images supported the application to help avoid concerns and criticism.

In summary, Mr Davey challenges us all to consider the presentation of all we do. "We cannot criticize the public for not buying dairy products if we are not promoting the high standards or production and welfare that we should rightly be proud of."

CowPlan®
.com

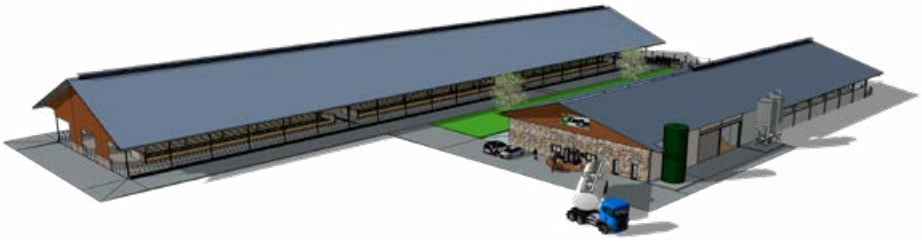

New Filon Over-Roofing Brochure Available

We are pleased to announce a new comprehensive brochure for our Filon Over-Roofing System is now available for download from our website.

This lightweight system is an ideal choice for refurbishing a failing roof to extend its life span by up to, more than 30 years.

For more information please contact our Technical Department or your Filon contact.

filon.co.uk

FILON®

Team Filon Race For Life

In support of Carol, one of our amazing Sales Office Team, who is going through a tough time at the moment, a team from Filon took part in Cancer Research UK's 5k Race for Life at Sutton Park on 23rd June. A huge thank you goes out to all our very generous customers, suppliers, associates, friends and families. To date, we have raised £2,235.00 plus £285.00 in gift aid.

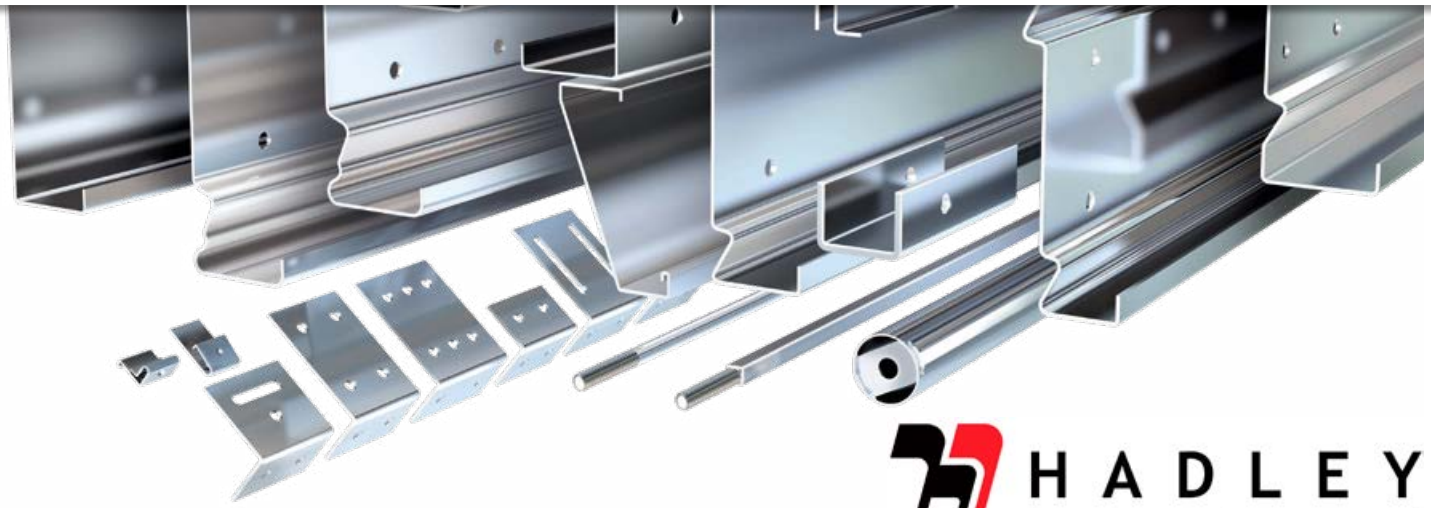

Hadley Group's UltraZed™ Purlins

Hadley Group's expertise in the production of cold rolled steel products combined with its outstanding technical, structural and design abilities, has enabled the manufacturer to develop a range of agricultural systems offering a unique combination of durability, stability and value. Hadley Group can deliver industry standard and bespoke steel framing for projects of all sizes.

The company's leading UltraZed™ roof purlins are the ideal solution for agricultural projects. Available in four systems; non-continuous, sleeved, heavy end bay sleeved and double spanning butt-jointed, the choice of system can be dictated by span, load, sheeting line limitations, the number of bays and the end user's preferred site practice.

UltraZed™ purlins are produced from high tensile steel and have been developed to outperform conventional products; holding exceptional load-carrying capabilities, significant weight savings (typically between 6 and 13%), excellent strength and design flexibility. They are CE marked to BS EN 1090 Execution class 4 and are available in a choice of 59 different depth and gauge variations.

Benefitting from Hadley Group's patented cold roll-forming process, this ensures a long service life, season after season, year after year, but also delivers more environmentally friendly products.

For more information on Hadley Group's UltraZed™ purlins, please visit **https://www.hadleygroup.com/markets/construction/structural-products/purlin-and-side-rail-systems**.

New Factories for Persimmon Homes

In 2017 S&A Fabrications won a contract with Persimmon Homes to build a new 1,900 sqm brick manufacturing factory at Harworth in South Yorkshire, the facility which is now operational is producing 80 million bricks a year, or 60% of the company requirements.

"Bringing this project together was a serious undertaking as all the production machinery to go in the building came from across Europe and had pits and penetrations in the building as well as ovens so we had to tie it altogether and build our envelope around them." Simon Pelly, MD.

S&A obviously proved their abilities because in late 2018 we started work on the second production facility for Persimmon, on the same site. This second building was to create a roof tile manufacturing facility totalling 1,600sqm. Similar to the brick factory this composite clad frame had pits and penetrations throughout and liaising with the ground workers and machinery providers has been key to the success of the project.

The envelope is now complete but S&A have been asked back again to now provide all the staircases and gantries within the facility, which started in July 2019.

"Working with Persimmon on these projects has been a pleasure, they know what they want and the challenge has been tying all the various machine requirements together so as we could construct the building for them, whilst not tripping over the ground worker creating all the external facilities." Chris Wilcock, S&A Projects Manager.

Protected by Kingspan WARRANTY

Complete Building Envelope Solutions
featuring Kingspan RW Pitched Roof System

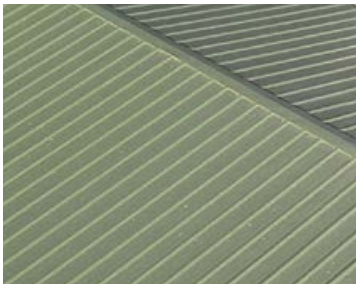

Kingspan Insulated Panels RW Roof system is a factory-engineered system for very fast installation and completion of a variety of agricultural and industrial buildings.

The system comprises a complete range of structural steel products, high performance insulated panels, insulated gutters, superior polycarbonate daylighting, height-safety systems and a bespoke range of corners and flashings. Kingspan Insulated Panel buildings combine high performance structure and insulation with rapid build and protected lifetime performance.

Kingspan Insulated Panels
Greenfield Business Park No.2, Holywell, Flintshire CH8 7GJ
Tel: +44 (0) 1352 716100 www.kingspanpanels.co.uk

Kingspan®

Image Courtesy of Timmins Engineering & Construction

Metal Cladding on Agricultural Buildings

While fibre cement remains a common choice for the exterior cladding on agricultural buildings, especially for the roof, metal cladding systems are now frequently specified and offer some advantages over more traditional materials. This article aims to highlight the main product options for clients wishing to use metal cladding on their buildings and present guidance for its specification and installation.

Metal cladding systems

There are three fundamental types of metal cladding system that are commonly used on steel portal-framed buildings:

- Single skin
- Built-up
- Insulated sandwich panel.

Single skin systems are the simplest form of metal cladding and consist of a single sheet of profiled metal (usually coated steel) fixed directly to the purlins or cladding rails. They provide no insulation whatsoever, so should only be used for unheated buildings, where the primary purpose of the cladding is to provide shelter. Modern steel cladding has a rolled trapezoidal profile, typically 32mm deep, which is designed to provide sufficient strength and rigidity for the sheets to span up to 2m between purlins or rails. The profile also aids with the run-off of rainwater. Old-fashioned sinusoidal corrugated profiles are still available, but are less common. Steel cladding sheets are manufactured from pre-coated steel coil, so there is no need to paint in-situ. The coating consists of a number of layers, starting on the inside with a layer of zinc to provide corrosion resistance and ending on the outside with the coloured organic coating designed to ensure long term durability (60 year warranties are available). A wide range of colours is available, enabling the finished building to blend in with its surroundings.

Built-up systems, as the name suggests, are built up from individual components that, when acting together, form an insulated building envelope. The first layer of the build-up is a shallow metal liner, whose primary function is to support the insulation. The next layer is the spacer system, which typically consists of a row of brackets fixed through the liner to the purlins. These brackets support rails running parallel to the purlins, which in turn support the outer weather sheet. The weather sheet is usually a trapezoidal steel sheet of the kind described above for single skin cladding. The void between the liner and weather sheet is filled with insulation, the depth of which will depend on the required 'U-value'. Mineral wool insulation is the most commonly used in built-up roof and wall cladding systems.

Insulated sandwich panels also consist of a liner and weather sheet, but the void is filled with a layer of rigid insulation capable of supporting the weather sheet and external loading without a spacer system. Sandwich panels can either be profiled (for roofs), flat or 'lightly profiled' (for walls) and are commonly filled with either PIR foam or mineral wood insulation. The liner and weather sheets are both made from pre-coated steel coil, as described above, providing a strong and durable cladding solution. Unlike built-up systems, insulated sandwich panels are factory assembled with the sheets bonded to the insulation under carefully controlled conditions. This significantly reduces the effort required on site and limits the scope for costly installation errors.

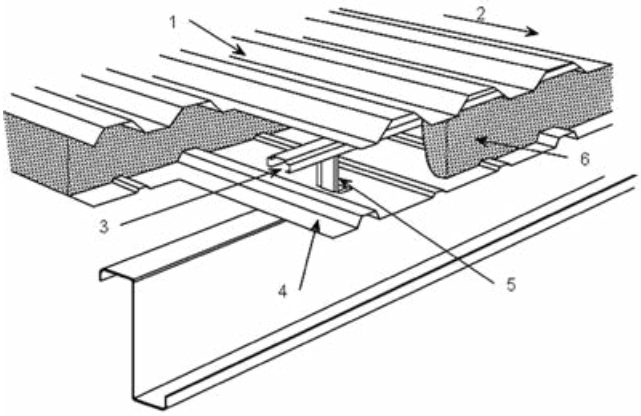

1 Weather sheet
2 Slope
3 Bar
4 Liner sheet
5 Bracket
6 Insulation

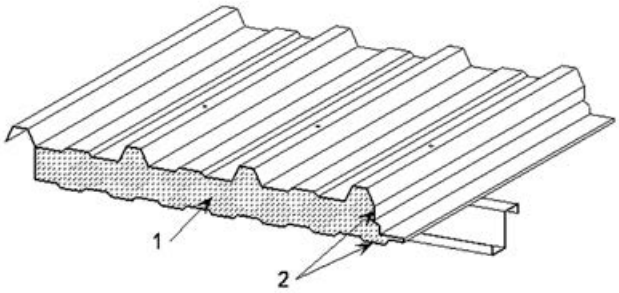

1 Insulation
2 Metal sheets

Illustrations: SteelConstruction.info

Specification issues

When specifying any construction product, it is necessary to appreciate the functions of the product and understand the requirements placed upon it. With cladding systems, it is often mistakenly believed that their sole purpose is to provide shelter from wind and rain. In reality, the cladding is an integral part of the building and often has multiple requirements that need to be met simultaneously if the building is to function properly. The functions of the cladding may include:

- Provide a weather-tight envelope to the building
- Provide adequate insulation
- Support the weight of maintenance access
- Support the weight of snow including drifts
- Resist wind uplift
- Provide restraint to the purlins and cladding rails
- Prevent unwanted draughts in animal housing
- Prevent heat loss through air leakage
- Prevent the spread of fire
- Enhance the appearance of the building.

The ability to resist snow, wind and imposed loading is especially important, since failure to meet this basic requirement can lead to collapse of the roof with potentially fatal implications for anybody walking on it or working underneath. The issue of snow and wind loading has been covered several times already in this column, but two points are worth re-iterating. Firstly, the snow and wind loading are both dependent on the building location and geometry so should be calculated for every building. Secondly, wind loading varies across the roof and wall and is usually higher close to the ends of the building, at the eaves and also over the ridge. Snow loading tends to be more uniform except at snow drift locations, so watch out for parapets and similar obstructions.

Other issues to consider when specifying the cladding include:

- Condensation
- Durability
- Cost.

Of these, condensation is sometimes seen as problem for metal cladding systems and is often stated as a reason for specifying other materials. It is, however, worth remembering that condensation is a symptom of a poorly ventilated building in which moisture in the atmosphere is allowed to accumulate. The solution to this problem is to ensure an adequate flow of fresh air into the building, while providing a means for the stale moist air to be expelled, e.g. vents in the roof. Condensation should not, therefore, be viewed as a barrier to the use of metal cladding. Furthermore, it is perfectly feasible to construct a draught-free building with adequate ventilation if the envelope is detailed correctly.

Installation issues

The installation of the roof and wall cladding should be undertaken in a way that:

- Minimises the risks to operatives and other people
- Minimises the risk of damaging the cladding
- Maximises the chance of the building as a whole performing correctly.

In order to achieve these objectives, the construction team, including main contractor and client where appropriate, need to plan the installation of the cladding well before the first sheet or panel arrives on site. The planning needs to begin with the delivery of the of the cladding to site, its unloading from the delivery vehicle and storage prior to installation. Careful consideration needs to be given to the installation sequence, where and how the cladding is to be lifted and how the safety of the installers is to be maintained throughout the process. No work should be undertaken without a written method statement.

Prior to the arrival of the cladding to site, a suitable area needs to be cleared and prepared for the delivery, unloading and storage of the sheets or panels. To reduce the risk of damage, the bundles of cladding should be lifted using synthetic or protected chain slings and should be loaded onto pallets or timbers on an even surface. Where the roof is used to store materials, care must be taken to ensure that the building structure can support the concentrated loading without damage. Heavy packs of materials should always be placed over the rafters and not in the middle of the purlin span. The installation of the cladding should be undertaken following a pre-determined sequence. Since the structural performance of the purlins is often dependent on restraint provided by the cladding, it is essential that the cladding is fixed as it is laid to minimise the length of unrestrained purlin at any given time.

Conclusions

Metal cladding systems provide a high performance solution for the roof and wall cladding of agricultural buildings. If specified and installed correctly, such cladding can deliver the required weathertightness, structural integrity and thermal performance for decades with only minimal maintenance. However, as with other highly engineered products, care needs to be taken to avoid damage during handling and storage.

Dr Martin Heywood
RIDBA Technical Consultant

A specialist in the structural engineering of agricultural and industrial type steel framed buildings, Dr Martin Heywood, is the technical consultant for RIDBA members.

Martin represents RIDBA on the B/549 committee and the sector on B/525/1 and CB/203.

For further information contact: Technical@ridba.org.uk.

BUILDUK
Leading the Construction Industry

Payment Under the Spotlight

With the focus on payment practices across the industry, Build UK members are continuing to improve their performance based on data submitted under the Duty to Report on Payment Practices and Performance.

Since Build UK began publishing this information 12 months ago, the average time taken to pay invoices by Contractor members has reduced by 5 days to 40 days, with the average percentage of invoices paid beyond terms falling from 34% to 25%.

For the first time, Build UK is also including within its table the percentage of invoices paid within 60 days, in order to reflect the increasing use of this metric within the industry.

This includes the Cabinet Office which has published guidance on how it will take account of a company's approach to payment in the procurement of Government contracts above £5 million per annum from September 2019. Companies will be asked to demonstrate the following over a 12-month period:

- Whether it has paid its suppliers in accordance with the contractual terms that it applies to its supply chain; and
- Whether, overall, it has paid 95% of invoices within 60 days.

Where a company does not meet the required standard, it may be excluded from bidding.

The Prompt Payment Code (PPC) is also suspending companies for non-compliance with the requirements. Suspended signatories which are not paying 95% of invoices within 60 days, based on their latest Duty to Report results, are now included in a separate list on the PPC website. A signatory that submits an action plan to improve its payment performance will be reinstated once it has demonstrated compliance.

Build UK Deputy Chief Executive Jo Fautley said:

"Over the past year, Build UK members have taken significant steps to improve payment performance within their organisations, demonstrating the value of increased transparency. Whilst there is still work to be done, with a number of companies recently being suspended from the Prompt Payment Code, this issue is now firmly under the spotlight at a senior level and these latest results show that the industry is serious about tackling it."

Further information is available at **www.BuildUK.org/dutytoreport**.

Reverse VAT Delayed By A Year

The implementation of Reverse VAT has been delayed by 12 months after successful lobbying efforts from a coalition of industry organisations. The decision from HMRC means that Reverse VAT – officially known as the Construction Services Domestic Reverse Charge – will now come into effect on 1 October 2020, a year after it was initially planned on 1 October 2019.

The campaign to secure the delay was fronted by the FMB and included Build UK working behind the scenes to successfully affect change. In a letter to HMRC in August the coalition made the case that the impact of the changes were not fully understood within the industry in addition to the ongoing uncertainty caused by Brexit. HMRC acknowledged that the extended implementation was down to industry efforts to highlight concerns that the sector would not be ready in time.

Reverse VAT will be a new way of collecting VAT from businesses that provide construction services within the scope of the Construction Industry Scheme (CIS), in an attempt to ensure the Government is recovering the correct amount of VAT from the construction sector.

It will apply to all work carried out within the UK and mean that VAT will no longer be paid to businesses in the supply chain for providing construction services unless they are providing those services directly to an 'End User', which will generally be the client. Instead the responsibility for paying VAT to HMRC will sit with the business that receives the construction services.

If your business is registered with the Construction Industry Scheme (CIS), Reverse VAT will affect you. Contractors working for other contractors will no longer receive VAT on the services they supply but will be paying VAT to suppliers of plant and materials. You may move from owing VAT to HMRC each quarter to being due a VAT repayment from HMRC each quarter. This could have a serious impact on cash flow, as cash that is used as working capital will no longer be available under Reverse VAT.

Companies in the supply chain should use the extra time wisely in order to prepare. Build UK has published a practical guide to explain the process and what you need to do to at **www.BuildUK.org/VAT**.

Frame Manufacturers

Companies that manufacture steel or timber framed buildings

3b Construction
South Street Depot, Port William, Newton Stewart, Dumfries & Galloway, DG8 9SH
01988 700 000
heather.vance@3bconstruction.co.uk
www.3bconstruction.co.uk

A.C. Bacon Engineering Ltd
Norwich Road, Hingham, Norfolk, NR9 4LS
01953 850 611
steel@acbacon.co.uk
www.acbacon.co.uk

A C Jackson Ltd
Buffer Depot, Rode Street, Tarporley, Cheshire, CW6 0EF
01270 588 841
info@acjackson.co.uk
www.acjacksonltd.co.uk

A.J. Lowther & Son Ltd
The Factory, Whitchurch, Ross-on-Wye, Herefordshire, HR9 6DW
01600 890 482
info@ajlowther.co.uk
www.ajlowther.co.uk

Adeilad Cladding Ltd
The Stores, Station Road, Llanwrda, Carmarthenshire, SA19 8EH
01550 777 497
adclad@live.co.uk
www.adclad.co.uk

Alan Jukes Steel Framed Buildings Ltd
Cae Mawr, Llanfechain, Powys, SY22 6XH
01691 828 094
alanjukes@btinternet.com
www.alanjukes.co.uk

Andenor Ltd
74 Rowan Way, Balderton, Nottinghamshire, Newark, NG24 3BJ
01623 490555
stuart@andenor.com

Balsham (Buildings) Ltd
1-2 Rosemary House, Lanwades Business Park, Kennet, Newmarket, Suffolk, CB8 7PN
01223 894 404
mickg@balsham.uk.com
www.balsham.uk.com

Bowie Lockwood Structures Ltd
Coombe Abbey Farm, Coombe Fields Road, Binley, Warwickshire, CV3 2SX
0845 2572 343
sales@bowielockwood.co.uk
www.bowielockwood.co.uk

C.E. Davidson Ltd
South View, Fressingfield, Eye, Suffolk, IP21 5PJ
01379 388 077
charlie@cedavidson.co.uk

Chris Hodgson Engineering Ltd
Seven Acres, Hollocombe, Chulmleigh, Devon, EX18 7QH
01769 520 422
info@chrishodgson.biz
www.chrishodgsonengineering.co.uk

Colley (Farm Buildings) Ltd
The Airfield, Cranswick Ind Est, Beverley Road Cranswick, Driffield, Yorkshire, YO25 9PF
01430 810 210
enquiries@colleyfarmbuildings.co.uk
www.colleyfarmbuildings.co.uk

Collins Design & Build Ltd
Unit 5, Westwood Ind Est, Pontrilas, Hereford, HR2 0EL
01981 240 682
info@collinsdb.co.uk
www.collinsdb.co.uk

Core Steel Ltd
Unit J, Three Mills Trading Estate, Old School Lane, Hereford, HR1 1EX
01273 815 932
info@danddconstruction.co.uk
www.danddconstruction.co.uk

Culm Valley Farm & Industrial Buildings Ltd
Bridge Street, Bridge Works, Uffculme, Devon, EX15 3AX
01884 841 557
culmvalleyfarmbuildings@btconnect.com
www.culmvalleyfarmbuildings.co.uk

Cumbria Steel Fabrications Ltd
Barras Lane Ind Est, Dalston, Carlisle, Cumbria, CA5 7ND
01228 711 318
office@csfab.co.uk
www.csfab.co.uk

D G Ashley Ltd
Highcroft, Aike, Driffield, East Yorkshire, YO25 9BG
01377 270 525
D6ash@aol.com

D Jones Welding
Llwyncelyn, Llandeilo, Carmarthenshire, SA19 6RY
01558 822 381
djoneswelding@hotmail.co.uk

DeVille and Lear Ltd
Mill Lane, Roston, Ashbourne, Derbyshire, DE6 2EE
01335 324 302
info@devilleandlear.co.uk
www.devilleandlear.co.uk

Dunn (Canadian - UK) Ltd
86 Spencer Road, Wigan, Lancashire, WN1 2QP
01942 237 487
dunnstorm650@aol.com
www.dunncanadian.co.uk

Eagle Structural Ltd
Lordship Road, Great Carlton, Louth, Lincolnshire, LN11 8JS
01507 450 081
info@eagle-structural.co.uk
www.eagle-structural.co.uk

Emmerson Doors Ltd
Enterprise Way, Sherburn in Elmet, Leeds, LS25 6NA
01977 685 566
sales@emmerson-doors.co.uk
www.emmerson-doors.co.uk

Ernest Leng and Son
Friars Hill, Sinnington, York, Yorkshire, YO62 6SL
01751 431 774
leng@xlninternet.co.uk
www.ernestleng.co.uk

F.W. Yelland & Son (Northlew) Ltd
Oljonna House, Station Road, Okehampton, Devon, EX20 3BN
01409 221 445
admin@yellands.free-online.co.uk
www.yelland-construction.co.uk

Farmplus Constructions Ltd
Shay Lane, Longridge, Preston, Lancashire, PR3 3BT
01772 785 252
Jim.Rogerson@farmplus.co.uk
www.farmplus.co.uk

Fowler & Gilbert Ltd
Unit B Sheriff House, Nantwich Road, Stanthorne, Middlewich, Cheshire, CW10 0LH
01606 738 738
info@flgb.co.uk
www.flgb.co.uk

FP McCann Ltd
3 Drumard Road, Knockloughrim, Magherafelt, Londonderry, BT45 8QA
028 79642558
info@fpmccann.co.uk
www.fpmccann.co.uk

George W Addison
Clayfolds, Aluah, Banff, Aberdeenshire, AB45 3UD
01261 821 288
stuartadd@btinternet.com

GLE Structurals Ltd
6A Station Street, Chatteris, Cambridgeshire, PE16 6NA
07711 032 600
mark.stone16@btinternet.com

Glendale Engineering (Milfield) Ltd
Berwick Road Industrial Estate, Wooler, Northumberland, NE71 6AH
01668 281 464
info@glendaleengineering.co.uk
www.glendaleengineering.co.uk

GLT & Son Roofing Services Ltd
15a Bronyglyn, Bronwydd, Carmarthen, SA33 6JB
07837 958 144
gltroof@ymail.com

Hemmings Construction Ltd
Cockshoot Farm, Dean Road, Newnham, Gloucestershire, GL14 1HH
01594 517 161
martin.hemmings@yahoo.co.uk

IN Fabrications Ltd
Unit 11, Talbot Way, Adderley Road Industrial Estate, Market Drayton, Shropshire, TF9 3SJ
ian@infabrications.co.uk

J I & M Davies & Son
Coed Rodyn Farm, Lixwm Road, Mold, Clwyd, CH7 5RQ
01352 741 843
daviescoed@aol.com

J. Wareing & Son (Wrea Green) Ltd
Whinbrick Works, Blackpool Road, Kirkham, Preston, Lancashire, PR4 2RJ
01772 682 159
sales@wareingbuildings.co.uk
www.wareingbuildings.co.uk

Knapp Farm Buildings
Quarryknowe, Knapp, Inchture, Perthshire, PH14 9SW
01828 686 265
alistairreid@knappfarmbuildings.co.uk
www.knappfarmbuildings.co.uk

Harrison Eastoft Ltd
Verandah House, Eastoft, Scunthorpe, North Lincolnshire, DN17 4PN
01724 798245
andy@harrisoneastoft.co.uk

Lancashire Steel Buildings
Copthurst Farm, Barrowford Road, Higham, Nr Burnley, Lancashire, BB12 9AS
01282 771748
sales@lancashire-steelbuildings.co.uk
http://lancashire-steelbuildings.co.uk/

M.D. Anthony Ltd
Unit 20, The Dock Business Park, Ely,
Cambridgeshire, CB7 4GS
01353 666 201
sales@mdanthony.com
www.mdanthony.com

Magna Buildings Ltd
Blackpitt Farm, Oddington, Moreton in Marsh,
Gloucestershire, GL56 0XW
01451 831 855
general@magnabuild.com
www.magnabuild.co.uk

Mervyn Rose Engineering Ltd T/A Rose Engineering
Paradise Farm, Bagber, Sturminster Newton,
Dorset, DT10 2HB
01258 472 866
info@rose-engineering.co.uk
www.rose-engineering.co.uk

Minshall Construction (UK) Ltd
Unit 1 Bert Smith Way, Adderley Road,
Market Drayton, Shropshire, TF9 3SN
01630 657 647
info@minshallconstruction.com
www.minshallconstruction.com

Morspan Construction Ltd
Llancayo Farm, Usk, Monmouthshire,
P15 1HY
01291 672334
enquiries@morspan.co.uk
www.morspan.com

Norman & Gray Ltd
Lilac Cottage, Malton Road, Pickering,
North Yorkshire, YO18 8EA
01751 472 812
phil@pjnorman.co.uk
www.pjnorman.co.uk

Northern Structures Ltd
Amble Industrial Estate, Amble, Northumberland,
NE65 0PE
01665 710 746
anthony.nelson@northernstructures.co.uk
www.northernstructures.co.uk

P McKenna's Agricultural Service Ltd
Esh Winning Industrial Estate, West Terrace,
Esh Winning, Durham, DH7 9PT
0191 373 3187
pmckenna_agri_servis@hotmail.com

Paul Huxley Construction Ltd
Unit 25 Rednal Industrial Estate, West Felton,
Oswestry, Shropshire, SY11 4HS
01691 610083
sales@paulhuxleyconstruction.co.uk
www.paulhuxleyconstruction.co.uk

Powell & Co. Construction Ltd
Longmoor, Shirlheath, Kingsland, Herefordshire,
HR6 9RG
01568 708819
sales@powellbuildings.com
www.powellbuildings.com

Preston Steel Structures
Ryecroft, Newby Clapham, Nr Lancaster,
Lancashire, LA2 8JD
01524 251 542
info@prestonsteelstructures.co.uk
www.prestonsteelstructures.co.uk

R E Buildings Ltd
Spout House, Bay Horse, Lancaster, Lancashire,
LA2 9DE
01524 792 247
sales@rebuildings.co.uk
www.rebuildings.co.uk

R J Doak & Sons Ltd
Northfaulds, Lanark, Lanarkshire, ML11 7SA
01555 661 425
rjdoakltd@gmail.com
www.doakco.com

RLH Welding & Fabrications Ltd
The Workshops, 32 Ford House Road, Newent,
Gloucester, GL18 1LQ
01531 828761
info@rlhwelding.co.uk
www.rlhwelding.co.uk

RM Gibbons Ltd
1 Catherines Lane, Bickerstaff, Ormskirk,
Lancashire, L39 9EL
07584 045 382
gibbonsroger@aol.com

Robinson Structures Ltd
Eagle Park Industrial, Alfreton Road, Derby,
Derbyshire, DE21 4AE
01332 574 711
sales@robinsons.com
www.robinsons.com

Ron Whitfield Engineers Ltd
Manorfield, Fridaythorpe, Driffield, Yorkshire,
YO25 9RT
01377 288 263
gwhitfield72@gmail.com

RWHB Ltd
Belston Cottage, Sinclairston, Cumnock, Ayrshire,
KA18 2RU
01290 700 073
enquiries@rwhb.co.uk
www.rwhb.co.uk

S & A Fabrications Ltd
Harmire Enterprise Park, Barnard Castle,
County Durham, DL12 8EH
01833 690 379
fabs@s-and-a.co.uk
www.s-and-a.co.uk

S. Schofield Steel Fabrications Ltd
Cookson's Yard Beverley, Carr Lane, Hambleton,
Lancashire, FY6 9BB
01253 702 806
info@schofieldsteel.co.uk
www.schofieldsteel.co.uk

SDM Fabrication Ltd
Foundry Way, March, Cambridgeshire, PE15 0WR
01354 660 895
richard@sdmlimited.co.uk
www.sdmstructures.com

Severn Fabrications Ltd
Unit 3, Maesbury Mill, Industrial Park, Oswestry,
Shropshire, SY10 8BB
01691 653 506
info@severnfabrications.co.uk
www.severn-fabrications.co.uk

Shufflebottom Ltd
Cross Hands Business Park, Cross Hands, Llanelli,
Carmarthenshire, SA14 6RE
01269 831 831
alex@shufflebottom.co.uk
www.shufflebottom.co.uk

Skinners Engineering Ltd
First Business Park, Holsworthy Industrial Estate,
Dobles Lane, Holsworthy, EX22 6HN
01409 254 430
skinnersengineeringltd@gmail.com
www.skinnersengineering.co.uk

Smith Contracts Scotland Ltd
Lawersbridge Farm, Mauchline, Ayrshire, KA5 6EU
01290 559358
enquiries@smithcontractsscotland.com
www.smithcontractsscotland.com

South West Steel Construction Ltd
Holsworthy Industrial Estate, Holsworthy,
Devon, EX22 6ER
01409 253 211
info@southweststeelconstruction.co.uk
www.southweststeelconstruction.co.uk

Steel Fabricators (Wales) Ltd
3 Nantyglyn, Cwmann, Lampeter, Dyfed,
SA48 8JT
01570 493 253
enquiries@steelfabwales.co.uk
www.steelfabwales.co.uk

Steeltek Structural Steel Ltd
Unit 4-6 Mallard Industrial Park,
Charles Street Horbury, Wakefield, Yorkshire,
WF4 5FH
01924 283 355
Neil.Fox@steeltek.co.uk
www.steeltek.co.uk

Supercraft Structures Ltd
Shobdon Airfield, Shobdon, Near Leominster,
Herefordshire, HR6 9NR
01568 708 456
info@supercraftltd.co.uk
www.supercraftltd.co.uk

T & M Buildings Ltd
16 Town Park, Torrington, Devon, EX38 7AQ
01805 623 555
tim.tandmbuildings@gmail.com
www.tandmbuildings-devon.co.uk

T & P Metcalfe & Sons Ltd
Forgewood House, Wray Road, Wennington,
Lancaster, Lancashire, LA2 8NN
01524 222 230
Info@tpmetcalfe.co.uk
www.tpmetcalfe.co.uk

Tilke Engineering Ltd
Lyndale, Bellhouse Lane, Anslow,
Burton-on-Trent, Staffordshire, DE13 9PA
01283 563 756
craig@tilkeengineering.co.uk
www.tilkeengineering.co.uk

Timmins Engineering and Construction Ltd
Innovation Works, Caenby Hall Business Park,
Caenby Corner, Market Rasen, Lincolnshire,
LN8 2BU
01673 878800
info@timminsagricultural.co.uk
www.timminsagricultural.co.uk

United Products Ltd
Evenwood Industrial Estate, Copeland Road,
Evenwood, County Durham, DL14 9SF
01388 834 295
Michael.Hammond@cagroup.ltd.uk
www.united-products.co.uk

W E Phillips and Sons Ltd
Unit 3, Ironbridge Industrial Estate,
Gittisham, Honiton, Devon, EX14 3AN
info@wephillipsandsons.co.uk
www.wephillipsandsons.co.uk

W H Ricketts & Sons
Forge Works, Ffynnon Gynydd,
Glasbury on Wye, Powys, HR3 5LX
01497 847 250
info@whrickettsandsons.co.uk

Webcox Engineering Ltd
Harris Rd, Calne, Wiltshire, SN11 9PT
01249 813 225
sales@webcox.co.uk

Wilson Construction Ltd
East Stobswood Farm Cottages,
Widdrington, Morpeth, Northumberland,
NE61 3AY
01670 791 404
wilsonconstruction@hotmail.co.uk
http://wilsonconstruction.co.uk/

Worman Construction Ltd
Beachley House, Beach Road, St. Brides, Newport,
Gwent, NP10 8SH
01633 681 710
worman.constructionltd@btinternet.com
www.worman-construction.co.uk

Yield Engineering Ltd
118 Church Street, Whaddon, Cambs, SG8 5RX
01763 243 300
simon@yieldengineering.co.uk
www.yieldengineering.co.uk

Yorkshire Steel Buildings (Holdings) Ltd
Aiskew Bank Farm, Back Lane, Bedale, Aiskew,
Yorkshire, DL8 1AU
01677 425324
info@yorkshiresteelbuildings.co.uk
www.yorkshiresteelbuildings.co.uk

Supplier Members

Companies that manufacture or supply products related to the rural and industrial buildings industry

3DCAD4U Ltd
19 Ellerbeck Road, Thornton Cleveleys, Blackpool, Lancashire, FY5 1DH
07512 104890
john@3dcad4u.com
www.steel-connections.co.uk

A Steadman & Son
Warnell, Welton, Carlisle, Cumbria, CA5 7HH
01697 478 277
info@steadmans.co.uk
www.steadmans.co.uk

Acorus Rural Property Services Ltd
Old Market Office, Risbygate Street, Bury St Edmunds, Suffolk, IP33 3AA
01284 753271
mike.bamforth@acorus.co.uk
www.acorus.co.uk

AJN Steelstock Ltd
Ickneild Way, Kentford, Newmarket, Suffolk, CB8 7QT
01638 555500
sales@ajnsteelstock.co.uk
www.ajnsteelstock.co.uk

Albion Sections Ltd
2 Albion Road, West Bromwich, West Midlands, B70 8BD
01215 531 877
tom.hughes@albionsections.co.uk
www.albionsections.co.uk

Ayrshire Metals
Royal Oak Way, Daventry, Northamptonshire, NW11 8NR
01327 300990
sales@ayrshire.co.uk
www.ayrshire.co.uk

Briarwood Products Ltd
Briarwood Business Park, Commerce Way, Walrow Industrial Estate, Highbridge, Somerset, TA9 4AG
01934 641 446
norman.morter@briarwoodproducts.co.uk
www.briarwoodproducts.co.uk

Capital Steel Group Ltd
Third Floor, 82 Union Street, Glasgow, G1 3QS
0141 4049 360
alanh@capitalsteelbuildings.co.uk
www.capitalsteelbuildings.co.uk

Cembrit Ltd
Studio 39, Thames Innovation Centre, 2 Veridion Way, Erith, Kent, DA18 4AL
0208 320 1184
ged.ferris@cembrit.co.uk
www.cembrit.co.uk

Eternit Ltd
Wellington Road, Burton upon Trent, Staffordshire, DE14 2AP
01283 501555
infouk@etexgroup.com
www.eternit.co.uk

Farmsmart Events Ltd
Killington Hall Farm, Killington, Kirkby Lonsdale, Carnforth, Lancashire, LA6 2HA
015396 20255
andy@farm-smart.co.uk
www.farm-smart.co.uk

Filon Products Ltd
Unit 3, Ring Road, Zone 2, Burntwood Business Park, Burntwood, Staffordshire, WS7 3JQ
01543 687300
markwilcox@filonproducts.co.uk
www.filon.co.uk

Hadley Group
123 West Bromwich Street, Oldbury, West Midlands, B69 3AZ
0121 555 1342
brian.cartwright@hadleygroup.com
www.hadleygroup.co.uk

Hereford Galvanizers Ltd
Westfields Trading Estate, Hereford, Herefordshire, HR4 9NS
01432 267 664
PeterS@hereford.galvanizers.co.uk
www.galvanizers.co.uk

Hornsey Steels Ltd
Riverlea, Bedstone Road, Shropshire, SY7 0AQ
01547 530419
info@hornseysteels.co.uk
www.roofing-sheets.co.uk

Huck Nets (U.K.) Ltd,
Gore Cross Business Park, Corbin Way, Dorset, DT6 3UX
01308 425 100
dave.collins@hucknetting.co.uk
www.huck-net.co.uk

IAE
Mossfield Road, Adderley Green, Longton, Stoke-on-Trent, Staffordshire, ST3 5BW
01782 339 320
lee.scragg@iae.co.uk
www.iae.co.uk

I. Bailey Steel Buildings Ltd
81, Burton Road, Derby DE1 1TJ
01332 650757
www.ibaileysteelbuildings.co.uk

James E. Smith (Timber) Ltd
Soho Pool Way Park Road, Hockley, Birmingham, B18 5JA
0121 5232 261
dave@jestimber.co.uk
www.jestimber.co.uk

Joris Ide UK
Elmbridge Court, Gloucester, GL3 1JZ
01452 412 069
brian.molloy@joriside.co.uk
www.joriside.co.uk

Joseph Ash Galvanizing
The Alcora Building 2, Mucklow Hill, Halesowen, Worcestershire, B62 8DG
0121 504 2560
stevenh@josephash.co.uk
www.josephash.co.uk

Kaltenbach Ltd
3 Caxton Park, Caxton Road, Bedford, MK41 0TY
01234 213 201
d.wilkins@kaltenbach.co.uk
www.kaltenbach.co.uk

Kingspan Insulated Panels Ltd
Greenfield Business Park 2, Greenfield, Holywell, Flintshire, CH8 7G
01352 716 100
paul.grimshaw@kingspan.com
www.kingspanpanels.co.uk

Lion Trading GB Ltd
Unit 1, Bloomhill Road, Moorends, Doncaster, Yorkshire, DN8 4SP
01405 812 285
john@lion-trading.co.uk
www.lion-trading.co.uk

MDS Industries Ltd
Booth Street, Smethwick, Birmingham, B66 2PF
0121 565 0022
ralph@mdsind.co.uk
www.mdsind.co.uk

Pro Net GB Ltd
Unit 1, Bloomhill Road, Thorne Moorends, Doncaster, DN8 4SP
01405 817557
ian@pronetgbltd.co.uk
www.pronetgbltd.co.uk

RNT Tanks & Silos Ltd
Unit 8 Drove Road, Gamlingay, Sandy, Bedfordshire, SG19 2HX
01767 654 916
ashley.gurney@rnttanks.com
www.rnttanks.com

StruMIS Ltd
Truro House, Derby, Derbyshire, DE21 6LY
01332 545 800
s.watson@strumis.com
www.strumis.com

SDS2 Ltd
65 Gresham Street, 6th Floor, London EC2U 7NQ
0208 249 9004
Andrew@sds2.com
https://sds2.com/UK

United Roofing Products
Longbridge Meadow Industrial Estate, Cullompton, Devon, EX15 1BT
01884 839 302
lukeevans@unitedroofingproducts.com
www.unitedroofingproducts.com

Wedge Group Galvanizing Ltd
Stafford Street, Willenhall, West Midlands, WV13 1RZ
01902 600 704
Claire.Jones@wedge-galv.co.uk
www.wedge-galv.co.uk

Contractor Members

Companies that work on site, groundworkers, steel erectors, cladders and general contractors

Curtis Engineering Frome Ltd
Curtis House, Manor Road, Marston Trading Estate, Frome, Somerset, BA11 4BH
01373 462 126
sales@curtisengineering.co.uk
www.curtisengineering.co.uk

Dormar Fabrications (Bilston) Ltd
Jubilee House, Halesfield 2, Telford, Shropshire, TF7 4QH
01952 585 736
kshepherd5@btinternet.com

Hilro Consulting Ltd
The Outhouse, Yewden Farm, Mill End, Hambleden, Oxfordshire, RG9 6RJ
01491 571 770
info@hilroconstruction.co.uk
www.hilroconstruction.co.uk

Industrial Building Solutions Ltd
64 Azura Close, Woolbridge Industrial Park, Wimborne, Dorset, BH21 6SZ
01202 822 337
info@indbs.co.uk
www.indbs.co.uk

J.D. Richmond and Son Ltd
46, Parsonage Road, Horsham, West Sussex, RH12 4AN
01403 266 124
richmond.46@btinternet.com

JA & CJ Martin Ltd
Campanile, Dippertown, Okehampton, Devon, EX20 4PT
07810 124291
james.martin19@btinternet.com

J A S Construction
2 Tettaridge Gate, Launceston, PL15 9QX
01409 255 787
jas.construction.js@gmail.com
www.jasconstruction.co.uk

John Edwards
Beudy Singrig, Rhydymain, Dolgellau, Gwynedd, LL40 2BP
01341 450 688
cefnbraich@aol.com

Key Projects Ltd
Unit 5, Smallbrook Farm, Hereford, Herefordshire, HR2 9TP
01981 250672/ 07584 102970
info@keyprojectsltd.co.uk
www.keyprojectsltd.co.uk

Leith Hill Plant Ltd
Oakwood Mill Farm, Stane Street, Ockley, Dorking, Surrey, RH5 5LX
01306 628 412
info@lhpl.co.uk, www.lhpl.co.uk

P. Phillips Contractors Ltd
Bumble Cottage, 6 Hilltop, Tillington, Petworth, West Sussex, GU28 9AQ
01798 343 392
pphillipscontractorsltd@gmail.com
www.ppcontractorsltd.co.uk

Re-Cladding UK Ltd
Works, Unit 4, Building 9, Preese Hall Farm Weeton, Near Kirkham, Lancashire, PR4 3HT
07980 897 000
sales@recladdinguk.com
www.recladdinguk.co.uk

Redwing Structures (Marlow) Ltd
Willow Cottage, Spurgrove Lane, Frieth, Oxon, RG9 6PA
01494 880857
david@redwingmarlow.co.uk
www.redwingmarlow.co.uk

Scotts of Whittington Ltd
Great Whittington, Tyne and Wear, Newcastle Upon Tyne, NE19 2HP
01434 672 288
office@scottsofwhittington.co.uk

Southcon (Kingstone) Ltd
Gooses Foot Business Park, Kingstone, Hereford, Herefordshire, HR2 9HY
01981 251 251
sales@southconkingstone.co.uk
www.southconkingstone.co.uk

Steel Build Masters Ltd
Pig Lane, Bishop's Stortford, Hertfordshire, CM22 7PA
0800 368 9100
sales@steelbuildmasters.co.uk
www.steelbuildmasters.co.uk

Affiliate Members

Individuals or companies that are allied to the rural and industrial design and building industry, most likely offering a consultancy service

A.C.P. (Concrete) Ltd
Wood Lane Business Centre, Uttoxeter, Staffordshire, ST14 8JP
01889 598 660
sales@acp-concrete.co.uk
www.acp-concrete.co.uk

Blue Dice Solutions Ltd
Denham Marina, 100 Acres, Sanderson Road, Uxbridge, Middlesex, UB8 1NB
07877 092 117
dpayne@bluedicesolutions.co.uk
www.bluedicesolutions.co.uk

Carter Jonas
82 Micklegate, York, Yorkshire, YO1 6LF
01904 558207
laura.graham@carterjonas.co.uk

Cow Plan Ltd
Rayens Close House, Long Ashton, Bristol, BS41 9HL
07751 050158
ivor@cowplan.com
www.cowplan.com

Fisher German Chartered Surveyors
The Estates Office, Norman Court, Ashby-de-la-Zouch, Leicester, Leicestershire, LE65 2UZ
01530 412 821
andrew.jackson@fishergerman.co.uk
www.fishergerman.co.uk

Halifax Estates Management Co.
Estate Office, Bugthorpe, York, Yorkshire, YO4 1QG
01759 368 219
dlord@halifaxestates.co.uk

Haston Reynolds Ltd
Coniston House, 20 Suckling Green Lane, Codsall, Wolverhampton, WV8 2BL
01902 840548
ian@hastonreynolds.co.uk
www.hastonreynolds.co.uk

Hudson Architecture
8 Raw Road, Brookeborough, Co. Fermanagh, BT94 4GF
028 8953 1753
niall@hudsonarchitecture.co.uk
www.hudsonarchitecture.co.uk

Promar International Ltd
Hill View, 63 Wells Road, Glastonbury, Somerset, BA6 9BY
07971 119034
paul.henman@genusplc.com
www.promar-international.com

RDA Consulting
1 MacDowall Street, Suite 2.26 & 2.27, Paisley, PA3 2NB
0141 561 7299
rdaconsulting@btconnect.com
www.rdaconsulting.co.uk

Savills (UK) Ltd
Olympic House, Doddington Road, Lincoln, Lincolnshire, LN6 3SE
01522 508 970
dmorris@savills.com
www.savills.com

Savills (UK) Ltd
28 Castle Street, Dumfries, DG1 1DG
0113 378 7675
rhenderson@savills.com
www.savills.com

Shand Building Design Ltd
The Grieves House, Schivas, Ythanbank, Ellon, Aberdeenshire, AB41 7TN
01358 761 377
douglas@sbdLtd.co.uk
www.sbdLtd.co.uk

Singleton & Co.
31 Cadley, Marlborough, Wiltshire, SN8 4NE
01672 514 241
guy.singleton@singletonandco.co.uk

Slyne Consulting Ltd
The Office, Tiverton, Lancaster Road, Slyne, Lancaster, LA2 6AL
01524 935085
info@slyneconsulting.co.uk

Stephenson & Son
York Auction Centre, Murton, York, Yorkshire, YO19 5GF
01904 489 731
steph.hall@stephenson.co.uk
www.stephenson.co.uk

Trustees of Chatsworth Settlement (Yorkshire Estate)
Estate Office, Bolton Abbey, Skipton, Yorkshire, BD23 6EX
01756 710 227
estateoffice@boltonabbey.com

College Member

Newcastle University
Agriculture Building, Newcastle University, Newcastle upon Tyne, Tyne and Wear, NE1 7RU
0191 208 7428
jeremy.franks@ncl.ac.uk
www.ncl.ac.uk/nes/undergraduate/agriculture/

Honorary Members

Andrew Cooke
Alastair Hardwick
Tony Hutchinson
Malcolm James
Clive Mander
Chris Pearce
Jim Loynes
Geoff Simpson

Concessionary Members

Arthur Brazel
Ian Gill
Peter Hardwill
Alan Hayes
Roger Henderson
Nicholas Parry
David Wood

FIBRE CEMENT ROOFING SPECIALISTS

UK'S LARGEST STOCK OF FIBRE CEMENT ROOFING AND ACCESSORIES

BRIARWOOD PRODUCTS LTD

01934 641 446 | BRIARWOODPRODUCTS.CO.UK

YOUR COMPLETE ROOFING SOLUTION

- UK's Largest Stock of Fibre Cement Roofing and Fittings
- The Only Roofing Supplier you need
- Full colour range available
- GRP Roof Lights
- PVC Rainwater Systems
- Timber Purlins
- Profiled Metal Sheets
- Nationwide Delivery - Fast Order Fulfilment

BBA CE RIDBA Rural & Industrial Design & Building Association